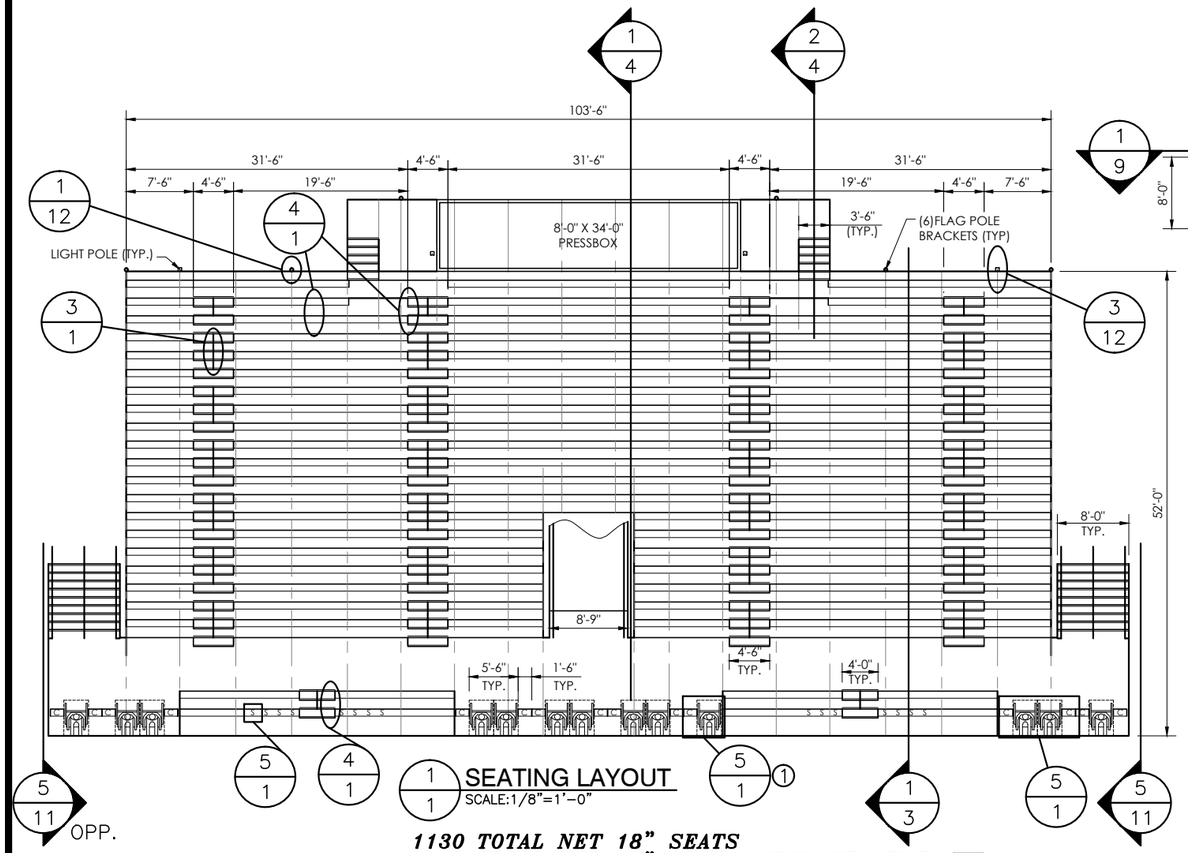

1/1 SEATING LAYOUT
SCALE:1/8"=1'-0"

1130 TOTAL NET 18" SEATS
15 TOTAL NET 18" SEMI-AMBULANT SEATS S
15 TOTAL NET 18" COMPANION SEATS C
13 TOTAL NET 33" WHEELCHAIR SPACES
1173 TOTAL SEATING CAPACITY

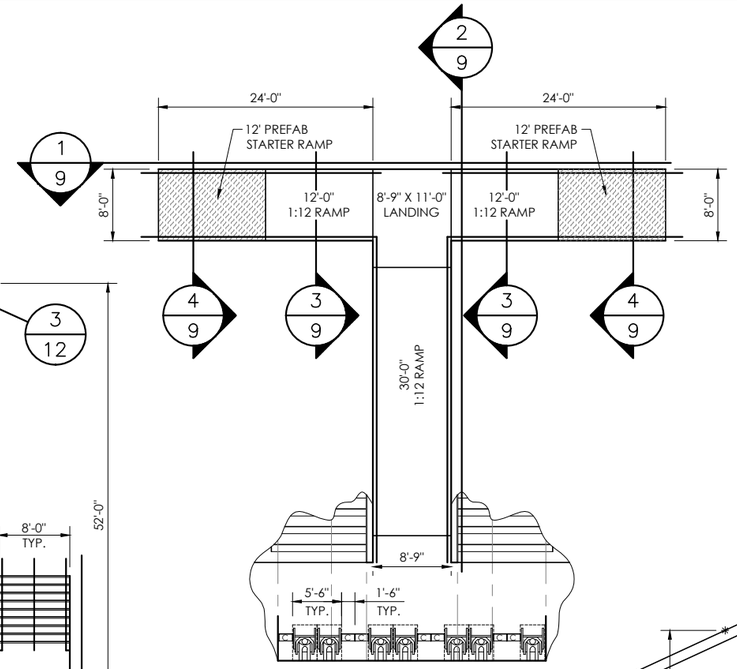

2/1 RAMP PLAN VIEW
SCALE:1/8"=1'-0"

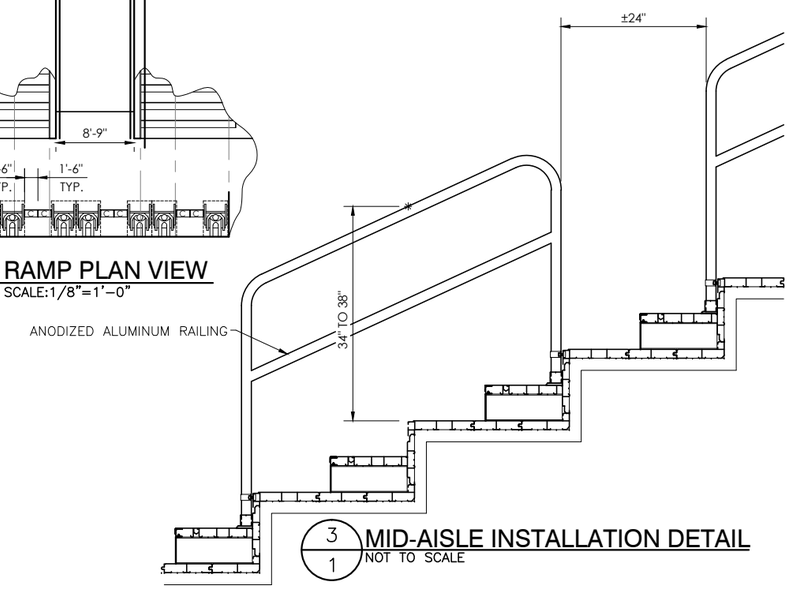

3/1 MID-AISLE INSTALLATION DETAIL
NOT TO SCALE

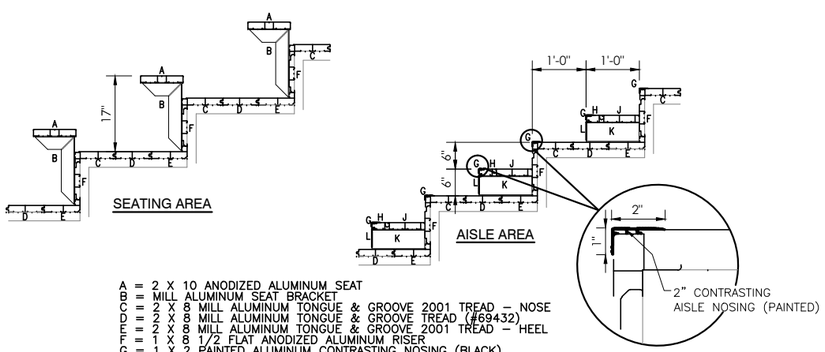

A = 2 X 10 ANODIZED ALUMINUM SEAT
B = MILL ALUMINUM SEAT BRACKET
C = 2 X 8 MILL ALUMINUM TONGUE & GROOVE 2001 TREAD – NOSE
D = 2 X 8 MILL ALUMINUM TONGUE & GROOVE TREAD (#69432)
E = 2 X 8 MILL ALUMINUM TONGUE & GROOVE 2001 TREAD – HEEL
F = 1 X 8 1/2 FLAT ANODIZED ALUMINUM RISER
G = 1 X 2 PAINTED ALUMINUM CONTRASTING NOSING (BLACK)
H = 2 X 4 MILL ALUM. INTERLOCK HALFSTEP – NOSE W/RISER
J = 2 X 8 MILL ALUM. INTERLOCK HALFSTEP – DECK
K = 4 1/2" MILL ALUMINUM HALFSTEP BRACKET
L = 4 1/2" ANODIZED ALUMINUM INTERLOCK STEP RISER

4/1 PLANK ARRANGMENT
NOT TO SCALE

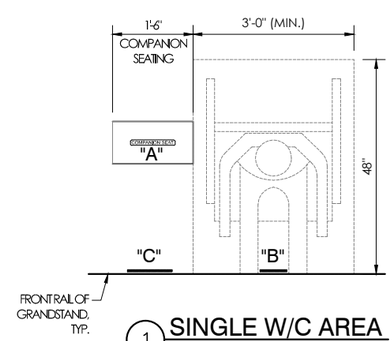

1/1 SINGLE W/C AREA

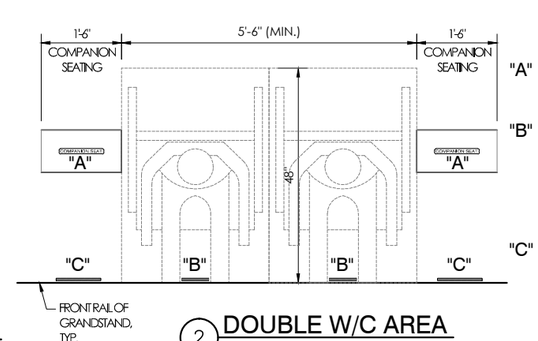

2/1 DOUBLE W/C AREA

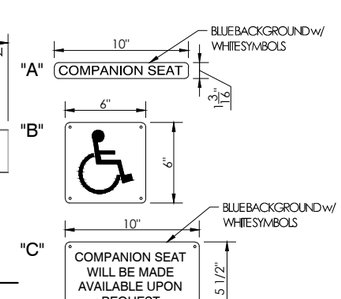

SIGNAGE TYP. @ WHEELCHAIR AREAS
A = COMPANION: 1 3/16" X 10" PLASTIC
B = ACCESSIBLE: 6" X 6" 0.040 ALUM.
C = COMPANION: 5 1/2" X 10" 0.040 ALUM.

5/1 SIGN DETAIL
NOT TO SCALE

DETAIL NUMBER
SHEET SHOWN ON
SHEET CUT FROM

THIS DRAWING AND ALL INFORMATION THEREIN IS THE PROPERTY OF THE SOUTHERN BLEACHER COMPANY, AND CONTAINS VALUABLE TRADE SECRETS. NOT TO BE COPIED. THIS DRAWING IS LOANED SUBJECT TO RE-TURN UPON DEMAND AND, IS NOT TO BE USED DIRECTLY OR INDIRECTLY IN ANY WAY DETRIMENTAL TO OUR INTERESTS.

NOT FOR CONSTRUCTION

Southern®
BLEACHER COMPANY
PO Box One, Graham, Texas 76450
801 Fifth Street.
Phone: 940/549-0733 Fax: 940/549-1365
Established 1946
GRANDSTANDS ■ BLEACHERS ■ TADIUMS

REV BY	DATE	DESCRIPTION

TITLE: SEATING LAYOUT (HOME)
24" TREADS / 22 ROWS X 103'-6"

FOR: EL MONTE UNION H.S. DISTRICT
EL MONTE HIGH SCHOOL
EL MONTE, CALIFORNIA

DATE	DRAWN	CHECKED
3/20/17	JGS	ECM/DMC

JOB NUMBER 17sd076

SHEET 1 OF 14

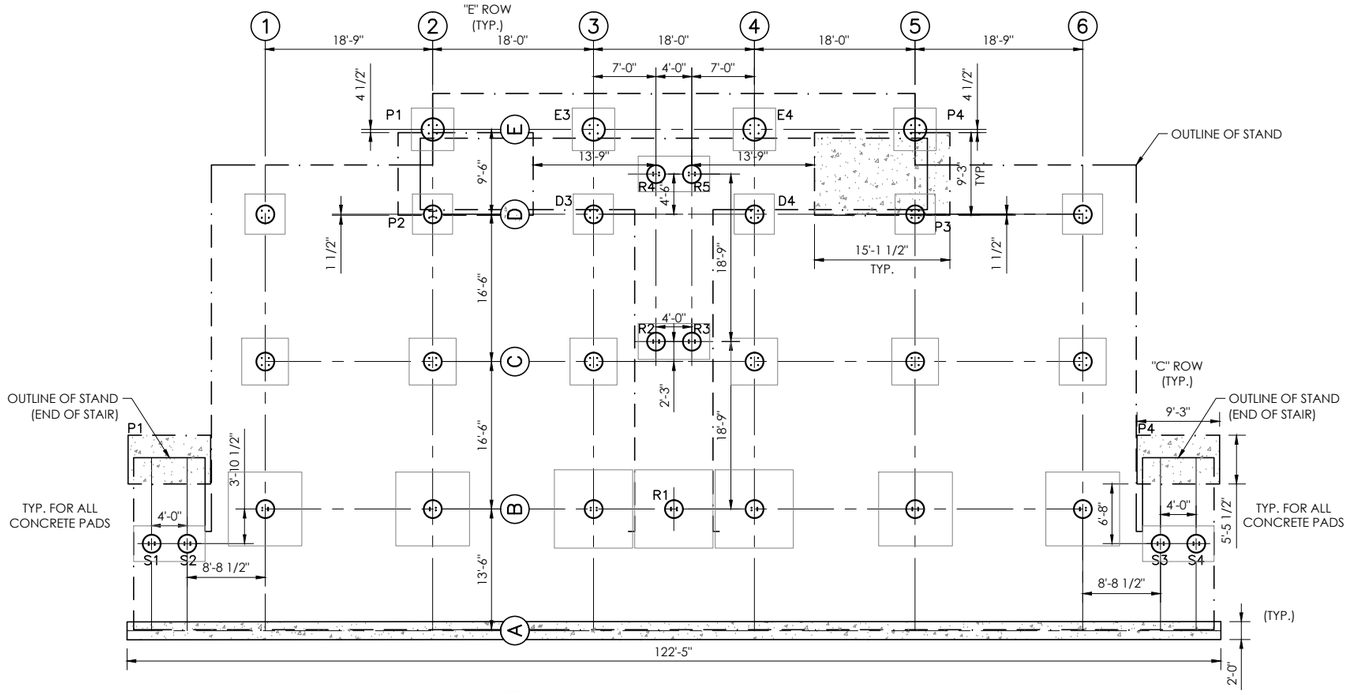

1/2 FOOTING LAYOUT
SCALE:1/8"=1'-0"

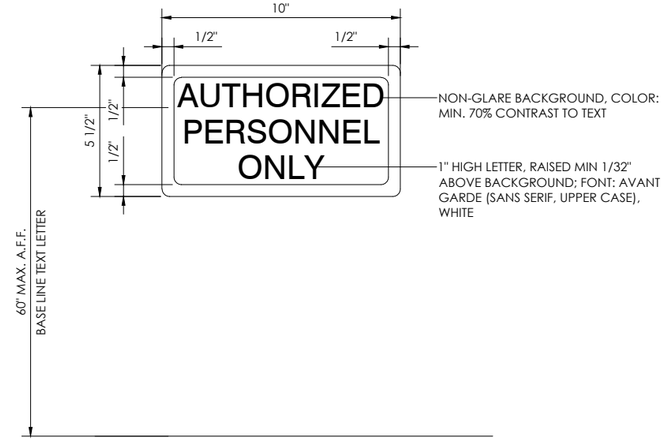

NOTE:
1. PROVIDE MECHANICAL MOUNTING W/ VANDAL RESISTANT FASTENERS PROVIDE ADHESIVE MOUNTING SYSTEM WHEN ATTACHED TO GLAZING.
2. PRIMARY ENTRANCED TO RECEIVE ROOM IDENTIFICATION SIGN, SECONDARY ENTRANCES TO HAVE ROOM NUMBER U.N.O. REFER ACCESSIBILITY PLAN AND DOOR SCHEDULE.

6/7 AUTHORIZED PERSONNEL
NOT TO SCALE

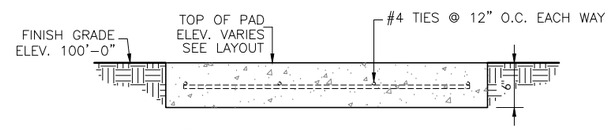

4/2 CONCRETE SLAB DETAIL
NOT TO SCALE

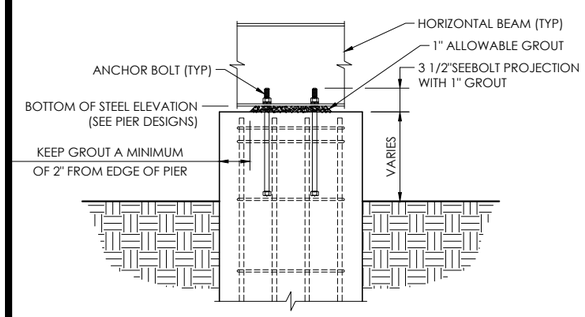

2/2 "B" ROW PIER TOP DETAIL
NOT TO SCALE

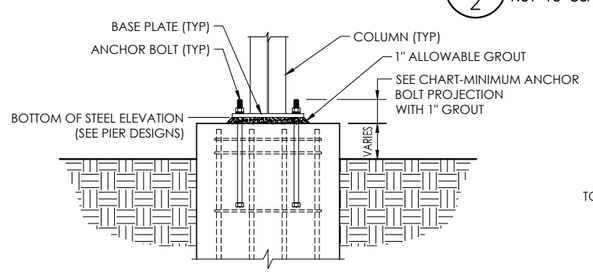

3/2 "C", "D", & "E" ROW PIER TOP DETAIL
NOT TO SCALE

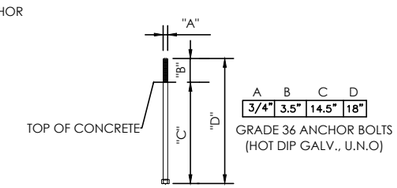

5/2 ANCHOR BOLT DETAIL
NOT TO SCALE

DETAIL NUMBER
SHEET SHOWN ON
SHEET CUT FROM

THIS DRAWING AND ALL INFORMATION THEREIN IS THE PROPERTY OF THE SOUTHERN BLEACHER COMPANY, AND CONTAINS VALUABLE TRADE SECRETS. NOT TO BE COPIED. THIS DRAWING IS LOANED SUBJECT TO RE-TURN UPON DEMAND AND, IS NOT TO BE USED DIRECTLY OR INDIRECTLY IN ANY WAY DETRIMENTAL TO OUR INTERESTS.

NOT FOR CONSTRUCTION

Southern®
BLEACHER COMPANY
GRANDSTANDS ■ BLEACHERS ■ TADIUMS
PO Box One, Graham, Texas 76450
801 Fifth Street.
Phone: 940/549-0733 Fax: 940/549-1365
Established 1946

TITLE: FOOTING LAYOUT (HOME)
24" TREADS / 22 ROWS X 103'-6"

TITLE: EL MONTE UNION H.S. DISTRICT
EL MONTE HIGH SCHOOL
EL MONTE, CALIFORNIA

REV BY	DATE	DESCRIPTION

DATE	DRAWN	CHECKED
3/20/17	JGS	ECM/DMc

JOB NUMBER 17sd076

SHEET 2 OF 14

DESIGN LOADING

TREAD & SEAT AREA 100psf UNIFORM LIVE LOAD.
SEAT (VERTICAL) 120 lbs/lf.
SEAT (HORIZONTAL SWAY) 24lbs/lf PARALLEL AND 10lbs/lf PERPENDICULAR TO SEAT.
TREAD - STAIR AND AISLE TREADS - MINIMUM CONCENTRATED LOAD OF 300LBS ON AN AREA OF 4 SQUARE INCHES
HANDRAIL & GUARDRAIL 50 lbs/lf IN ANY DIRECTION AT THE TOP.
HANDRAIL & GUARDRAIL 200 lbs CONCENTRATED IN ANY DIRECTION.
GUARDS, INFILL COMPONENTS - 50LBS PER SQFT IN HORIZONTAL DIRECTION
SNOW LOADS AS PER STATE ADOPTED CODE
WIND LOADS AS PER STATE ADOPTED CODE
SEISMIC LOADS AS PER STATE ADOPTED CODE

NOTES

1. ALL STRUCTURAL AND MISCELLANEOUS STEEL SHALL CONFORM TO THE FOLLOWING A.I.S.C. STANDARDS
   PLATE UP TO 1/2" THICK = A36
   PLATE U.N.O. = A572 GRADE 50
   ANGLE = A36/A36M GRADE 50
   WIDE FLANGE = A992 Fy=50 ksi
   CHANNEL = A36/A36M GRADE 50
   ROD = A36/A529 GRADE 50
   TUBE = A500 GRADE "B" 46 ksi
2. WELDS ARE ALL AROUND WITH TYPE ER70S-6 WIRE MIG.
3. ALL STEEL TO BE HOT DIPPED GALVANIZED TO A.S.T.M. A-123-89 ae1.
4. STRUCTURAL BOLTS ARE HOT DIPPED GALV. AND ARE EQUAL TO OR GREATER THAN A-307.
5. NO CONNECTIONS UTILIZING HIGH STRENGTH BOLTS ARE CLASSED AS SLIP CRITICAL.
6. ANODIZED ALUMINUM RAIL IS 1 1/4" NOMINAL PIPE SIZE. (1 5/8" O.D.)
7. SOUTHERN BLEACHER COMPANY AS A MANUFACTURER AND INSTALLER OF GRANDSTAND SEATING IS NOT AUTHORIZED TO CERTIFY PLANS AS ADA COMPLIANT. HOWEVER, TO THE BEST OF OUR KNOWLEDGE THESE PLANS MEET OR EXCEED ADA REQUIREMENTS FOR QUANTITY OF ADA SEATING, ACCESS/EGRESS TO ADA SEATING, & DISPERSAL OF ADA SEATING.
8. ALL FIELD CONNECTIONS ARE NON-SLIP CRITICAL U.N.O. ALL CONNECTIONS ARE DESIGNED TO UTILIZE A307 BOLTS, IT IS ACCEPTABLE TO USE A325N BOLTS IN LIEU OF THE A307 BOLTS. THE INSTALLATION OF THESE BOLTS ARE TO BE TIGHTENED A SNUG TIGHT CONDITION AS SPECIFIED BY AISC.

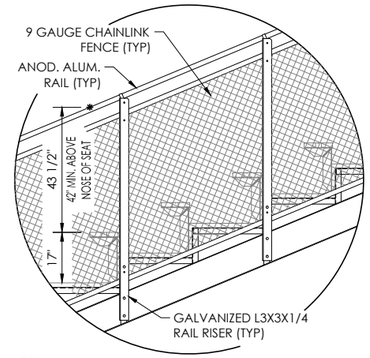

2/3 TYPICAL SIDE RAILING
SCALE:1/2"=1'-0"

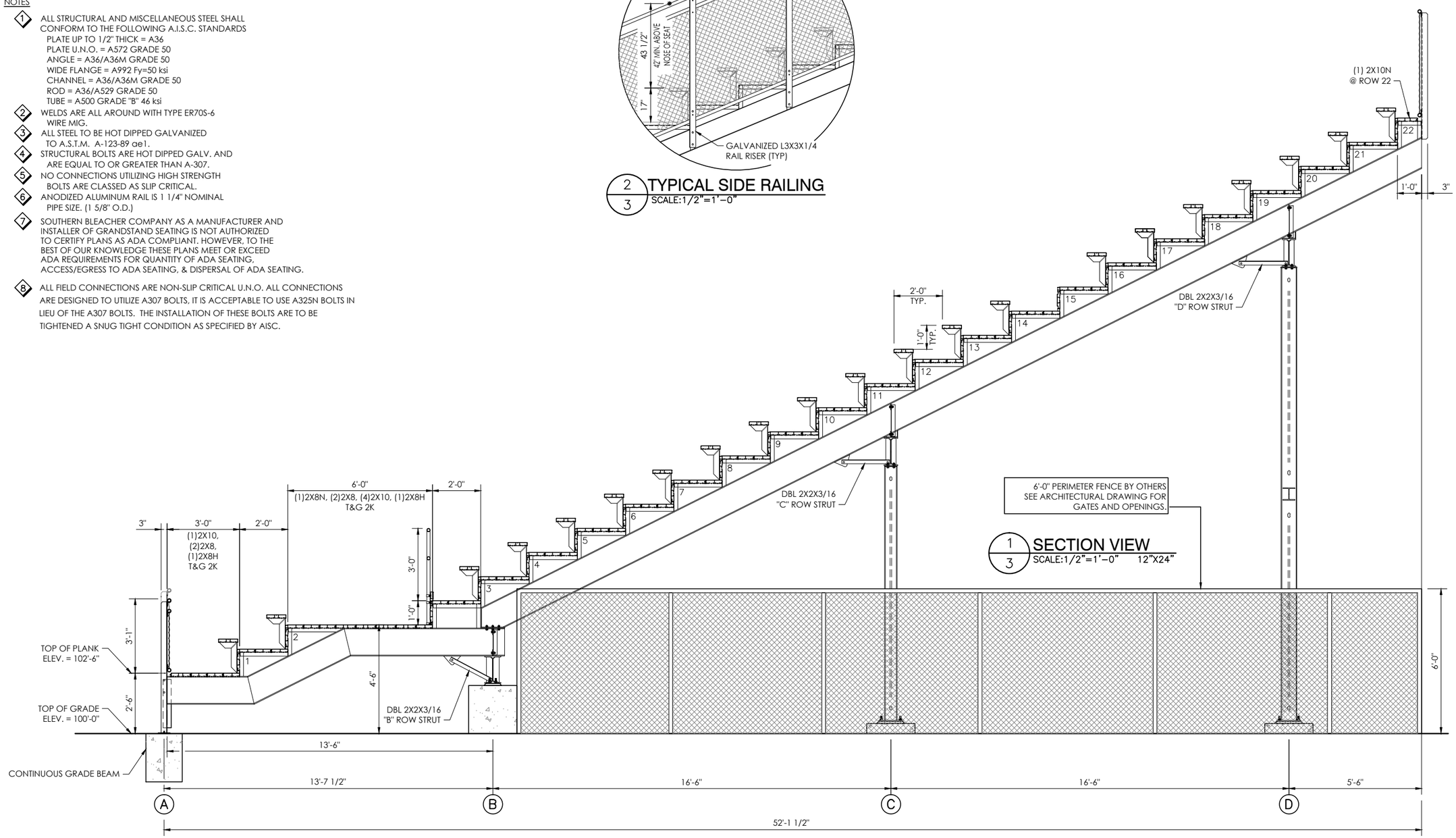

1/3 SECTION VIEW
SCALE:1/2"=1'-0" 12"X24"

DETAIL NUMBER
SHEET SHOWN ON
SHEET CUT FROM

THIS DRAWING AND ALL INFORMATION THEREIN IS THE PROPERTY OF THE SOUTHERN BLEACHER COMPANY, AND CONTAINS INFORMATION WHICH MAY NOT BE COPIED. THIS DRAWING IS LOANED SUBJECT TO RE-TURN UPON DEMAND AND, IS NOT TO BE USED DIRECTLY OR INDIRECTLY IN ANY WAY DETRIMENTAL TO OUR INTERESTS.

NOT FOR CONSTRUCTION

Southern®
BLEACHER COMPANY
GRANDSTANDS ■ BLEACHERS ■ TADIUMS
PO Box One, Graham, Texas 76450
801 Fifth Street.
Phone: 940/549-1365 Fax: 940/549-1365
Established 1946

TITLE: SECTION VIEW (HOME)
12" RISE X 24" TREADS / 22 ROWS

FILE: EL MONTE UNION H.S. DISTRICT
EL MONTE HIGH SCHOOL
EL MONTE, CALIFORNIA

REV BY	DATE	DESCRIPTION

DATE 3/20/17 | DRAWN JGS | CHECKED ECM/DMc

JOB NUMBER 17sd076

SHEET 3 OF 14

DESIGN LOADING

TREAD & SEAT AREA 100psf UNIFORM LIVE LOAD.
SEAT (VERTICAL) 120 lbs/lf.
SEAT (HORIZONTAL SWAY) 24lbs/lf PARALLEL AND 10lbs/lf PERPENDICULAR TO SEAT.
TREAD - STAIR AND AISLE TREADS - MINIMUM CONCENTRATED LOAD OF 300LBS ON AN AREA OF 4 SQUARE INCHES
HANDRAIL & GUARDRAIL 50 lbs/lf IN ANY DIRECTION AT THE TOP.
HANDRAIL & GUARDRAIL 200 lbs CONCENTRATED IN ANY DIRECTION.
GUARDS, INFILL COMPONENTS - 50LBS PER SQFT IN HORIZONTAL DIRECTION
SNOW LOADS AS PER STATE ADOPTED CODE
WIND LOADS AS PER STATE ADOPTED CODE
SEISMIC LOADS AS PER STATE ADOPTED CODE

NOTES

1. ALL STRUCTURAL AND MISCELLANEOUS STEEL SHALL CONFORM TO THE FOLLOWING A.I.S.C. STANDARDS
   PLATE UP TO 1/2" THICK = A36
   PLATE U.N.O. = A572 GRADE 50
   ANGLE = A36/A36M GRADE 50
   WIDE FLANGE = A992 Fy=50 ksi
   CHANNEL = A36/A36M GRADE 50
   ROD = A36/A529 GRADE 50
   TUBE = A500 GRADE "B" 46 ksi
2. WELDS ARE ALL AROUND WITH TYPE ER70S-6 WIRE MIG.
3. ALL STEEL TO BE HOT DIPPED GALVANIZED TO A.S.T.M. A-123-89 ae1.
4. STRUCTURAL BOLTS ARE HOT DIPPED GALV. AND ARE EQUAL TO OR GREATER THAN A-307.
5. NO CONNECTIONS UTILIZING HIGH STRENGTH BOLTS ARE CLASSED AS SLIP CRITICAL.
6. ANODIZED ALUMINUM RAIL IS 1 1/4" NOMINAL PIPE SIZE. (1 5/8" O.D.)
7. SOUTHERN BLEACHER COMPANY AS A MANUFACTURER AND INSTALLER OF GRANDSTAND SEATING IS NOT AUTHORIZED TO CERTIFY PLANS AS ADA COMPLIANT. HOWEVER, TO THE BEST OF OUR KNOWLEDGE THESE PLANS MEET OR EXCEED ADA REQUIREMENTS FOR QUANTITY OF ADA SEATING, ACCESS/EGRESS TO ADA SEATING, & DISPERSAL OF ADA SEATING.
8. ALL FIELD CONNECTIONS ARE NON-SLIP CRITICAL U.N.O. ALL CONNECTIONS ARE DESIGNED TO UTILIZE A307 BOLTS, IT IS ACCEPTABLE TO USE A325N BOLTS IN LIEU OF THE A307 BOLTS. THE INSTALLATION OF THESE BOLTS ARE TO BE TIGHTENED A SNUG TIGHT CONDITION AS SPECIFIED BY AISC.

2/4 SECTION VIEW @ STAIR STRINGER
SCALE:3/8"=1'-0" STRINGER 19 SHOWN

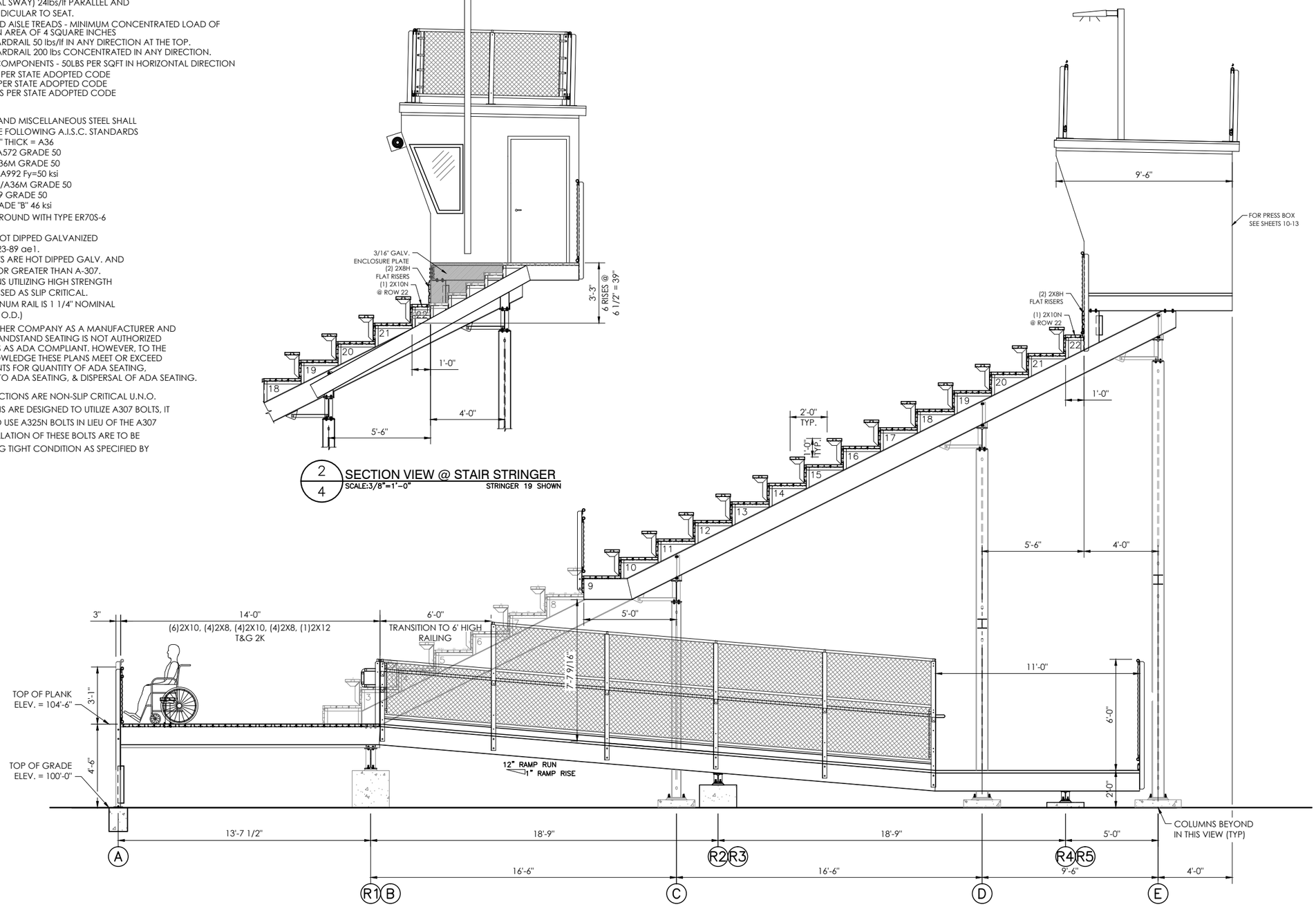

1/4 SECTION VIEW @ PRESSBOX
SCALE:3/8"=1'-0" 12"X24"

DETAIL NUMBER
SHEET SHOWN ON
SHEET CUT FROM

THIS DRAWING AND ALL INFORMATION THEREIN IS THE PROPERTY OF THE SOUTHERN BLEACHER COMPANY, AND IS CONFIDENTIAL AND MUST NOT BE REPRODUCED, COPIED, THIS DRAWING IS LOANED SUBJECT TO RE-TURN UPON DEMAND AND, IS NOT TO BE USED DIRECTLY OR INDIRECTLY IN ANY WAY DETRIMENTAL TO OUR INTERESTS.

NOT FOR CONSTRUCTION

Southern® BLEACHER COMPANY
GRANDSTANDS ■ BLEACHERS ■ TADIUMS
PO Box One, Graham, Texas 76450
801 Fifth Street.
Phone: 940/549-0733 Fax: 940/549-1365
Established 1946

TITLE: SECTION VIEW @ PRESS BOX (HOME)
12" RISE X 24" TREADS / 22 ROWS

SITE: EL MONTE UNION H.S. DISTRICT
EL MONTE HIGH SCHOOL
EL MONTE, CALIFORNIA

REV'D BY	DATE	DESCRIPTION

DATE 3/20/17 | DRAWN JGS | CHECKED ECM/DMc

JOB NUMBER 17sd076

SHEET 4 OF 14

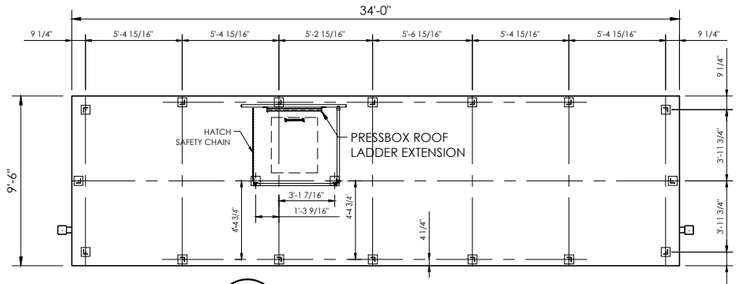

1/5 ROOF RAIL LAYOUT
SCALE:1/4"=1'-0"

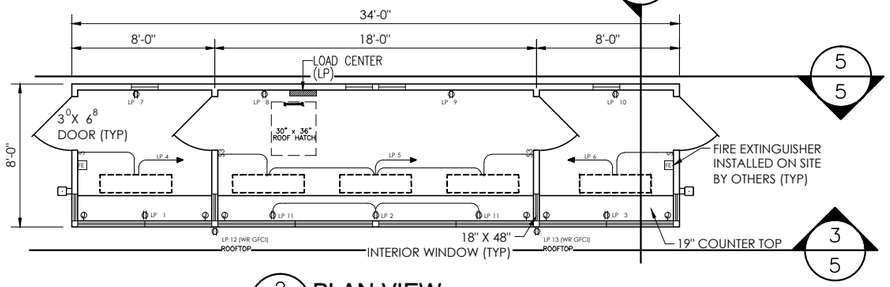

2/5 PLAN VIEW
SCALE:1/4"=1'-0"

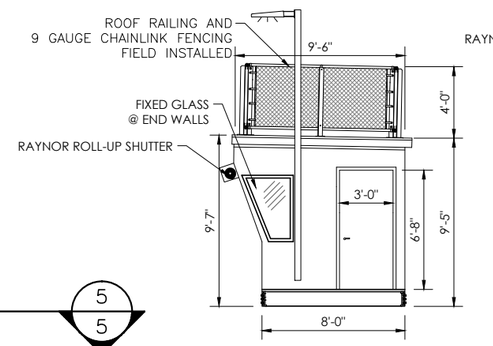

6/5 SIDE VIEW
SCALE:1/4"=1'-0"

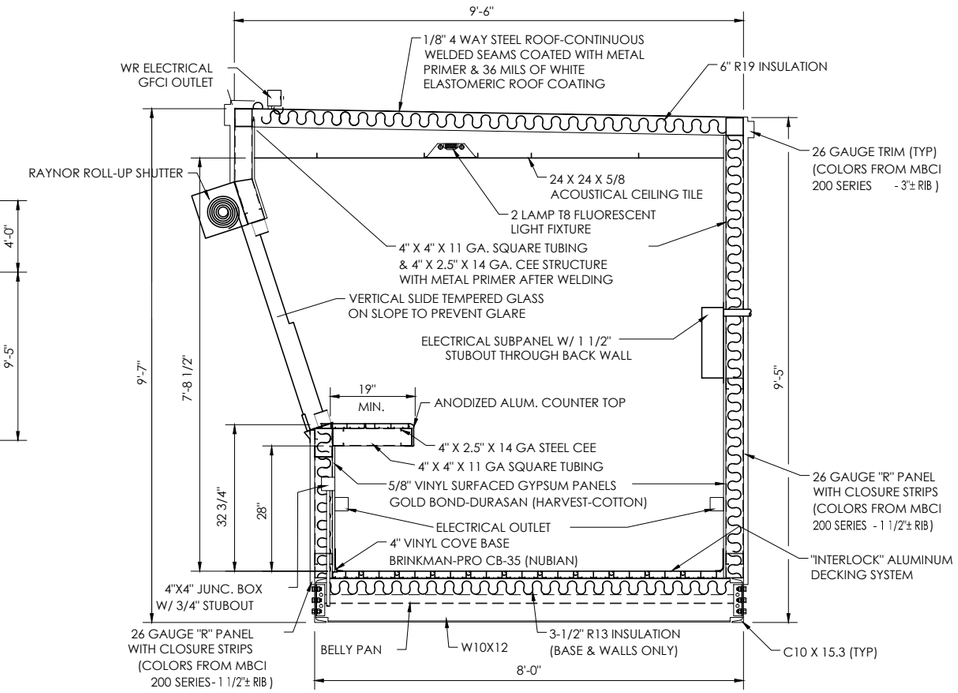

4/5 SECTION VIEW
SCALE: 3/4"=1'-0"

LOAD CENTER SCHEDULE

PANEL LP — 100 AMP - 16 CIRCUIT W/ EQUIPMENT GROUND — 240/120 VOLTS — 1 PH.

MOUNTING: ☐ FLUSH ☒ SURFACE — 10,000 SYN. A.I.C. MIN. — 100 AMP MAIN BREAKER

	BREAKER SIZE	BREAKER POLE	CIR. #	BUS A	BUS B	CIR. #	BREAKER SIZE	BREAKER POLE	
RECPT. FRONT WALL	20	1	1	●		2	20	1	RECPT. FRONT WALL
RECPT. FRONT WALL	20	1	3		●	4	20	1	(1) 1'X4' 2 LAMP RECESSED
(4) 1'X4' 2 LAMP RECESSED	20	1	5	●		6	20	1	(1) 1'X4' 2 LAMP RECESSED
RECPT. BACK WALL	20	1	7		●	8	20	1	RECPT. BACK WALL
RECPT. BACK WALL	20	1	9	●		10	20	1	RECPT. BACK WALL
2 RECPTACLES FRONT WALL	20	1	11		●	12	20	1	RECPT. ROOFTOP
RECPT. ROOFTOP	20	1	13	●		14	20	1	SPARE
SPARE	20	1	15		●	16			SPACE

FE — FIRE EXTINGUISHER INSTALLED ON SITE BY OTHERS (TYP)

15A. 125V. DUPLEX RECPT.

S3 — 15A. 125V. SINGLE POLE SWITCH

S — 15A. 125V. SINGLE POLE SWITCH

J — 4X4X2 1/8" JUNCTION BOX W/ 3/4"C STUBOUT

1'X4'- 2 BULB FLUORESENT FIXTURE METALUX GR8 232 A UNV EB81U OR EQUAL

CONDUIT WILL BE 1/2" EMT, 1/2" STEELFLEX, OR SUFACE RACEWAY UNLESS OTHERWISE NOTED

WIRING ON 20A BREAKERS WILL BE #12 = THWN - THHN

EQUIPMENT GROUND RUN IN ALL CONDUITS OR NON-METALLIC SURFACE RACEWAYS

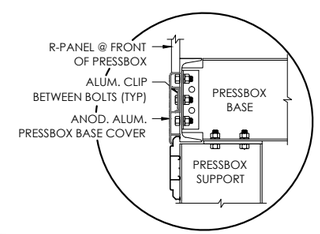

7/5 PRESSBOX BASE TRIM DETAIL
NOT TO SCALE

NOTES:

WALL PANELS ARE ATTACHED WITH #12 TEK SCREWS – 6" O.C. AT THE TOP AND BOTTOM OF THE PANELS AND 12" O.C. AT ANY INTERMEDIATE BRACE.

LAP SCREWS ARE PLACED AT EACH END OF THE PANELS, AT THE INTERMEDIATE SUPPORTS, AND AT THE MID POINT BETWEEN SUPPORTS (TEK #14)

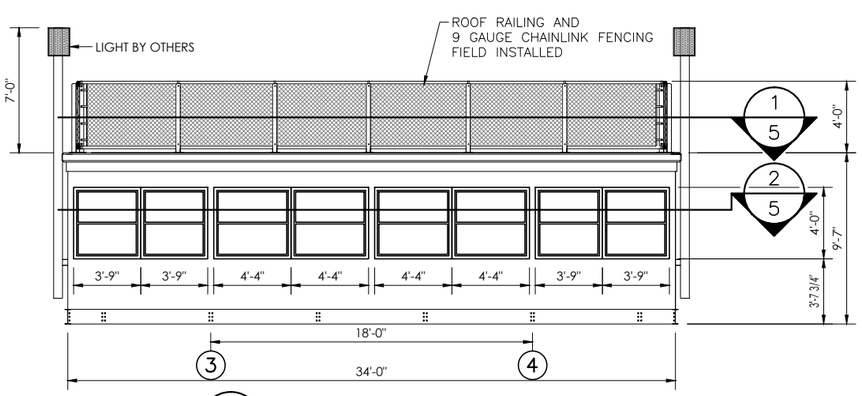

3/5 FRONT ELEVATION VIEW
SCALE:1/4"=1'-0"

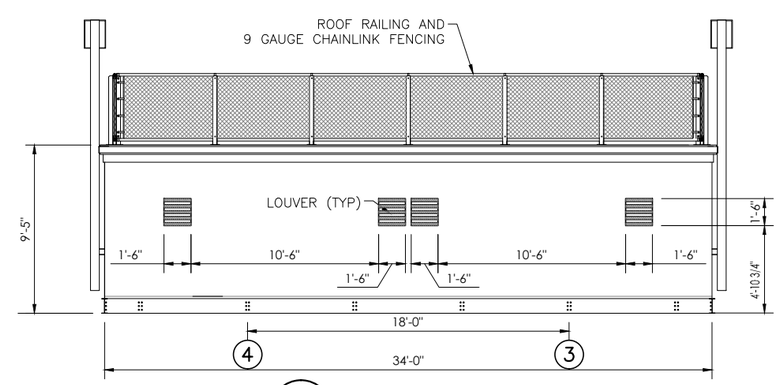

5/5 REAR ELEVATION VIEW
SCALE:1/4"=1'-0"

DETAIL NUMBER
SHEET SHOWN ON
SHEET CUT FROM

THIS DRAWING AND ALL INFORMATION THEREIN IS THE PROPERTY OF THE SOUTHERN BLEACHER COMPANY, AND CONTAINS INFORMATION WHICH MAY NOT BE COPIED. THIS DRAWING IS LOANED SUBJECT TO RETURN UPON DEMAND AND, IS NOT TO BE USED DIRECTLY OR INDIRECTLY IN ANY WAY DETRIMENTAL TO OUR INTERESTS.

NOT FOR CONSTRUCTION

Southern®
BLEACHER COMPANY
GRANDSTANDS ■ BLEACHERS ■ TADIUMS
PO Box One, Graham, Texas 76450
801 Fifth Street.
Phone: 940/549-0733 Fax: 940/549-1365
Established 1946

NAME: SECTION VIEW @ PRESS BOX (HOME)
12" RISE X 24" TREADS / 22 ROWS

TITLE: EL MONTE UNION H.S. DISTRICT
EL MONTE HIGH SCHOOL
EL MONTE, CALIFORNIA

REV	BY	DATE	DESCRIPTION

DATE 3/20/17 | DRAWN JGS | CHECKED ECM/DMc

JOB NUMBER 17sd076

SHEET 5 OF 14

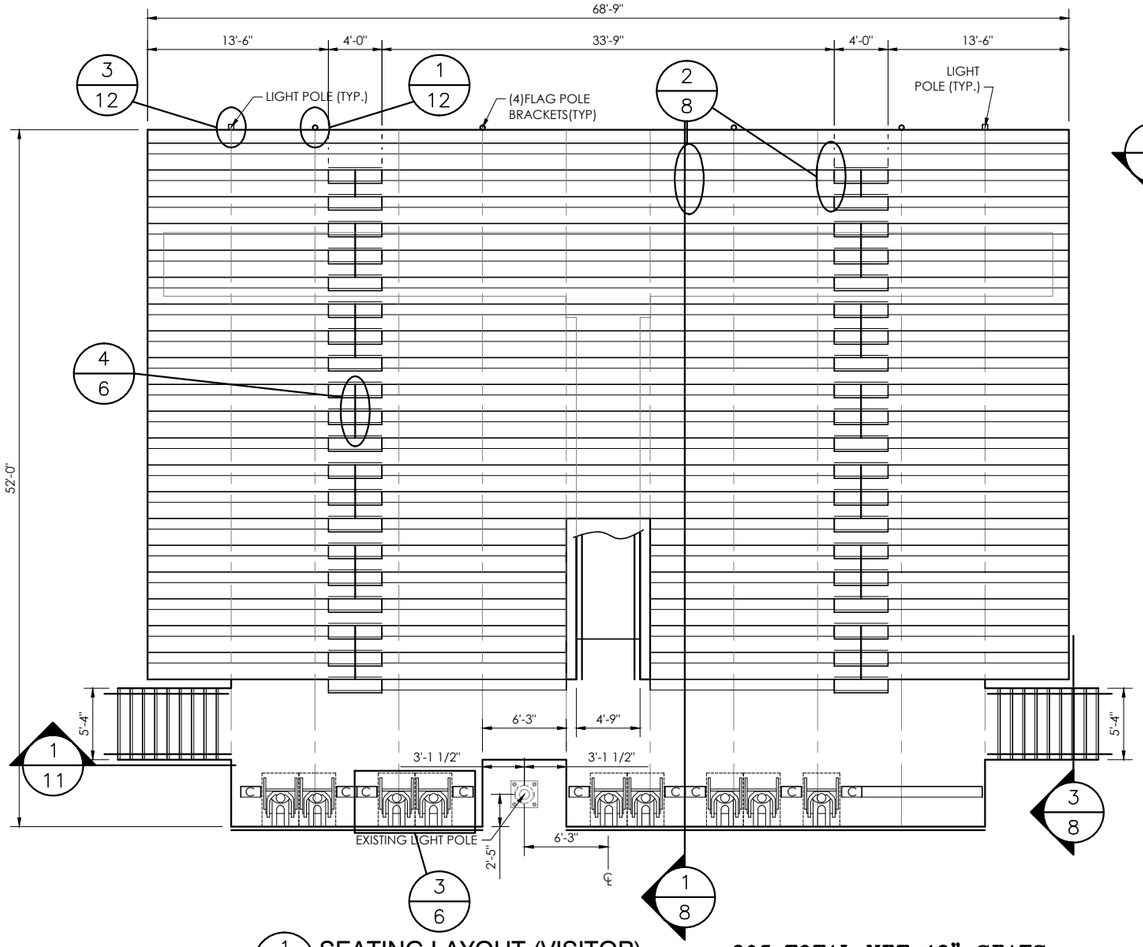

1/6 SEATING LAYOUT (VISITOR)
SCALE: 3/16"=1'-0"

805 TOTAL NET 18" SEATS
9 TOTAL NET 18" COMPANION SEATS
9 TOTAL NET 33" WHEELCHAIR SPACES
823 TOTAL SEATING CAPACITY

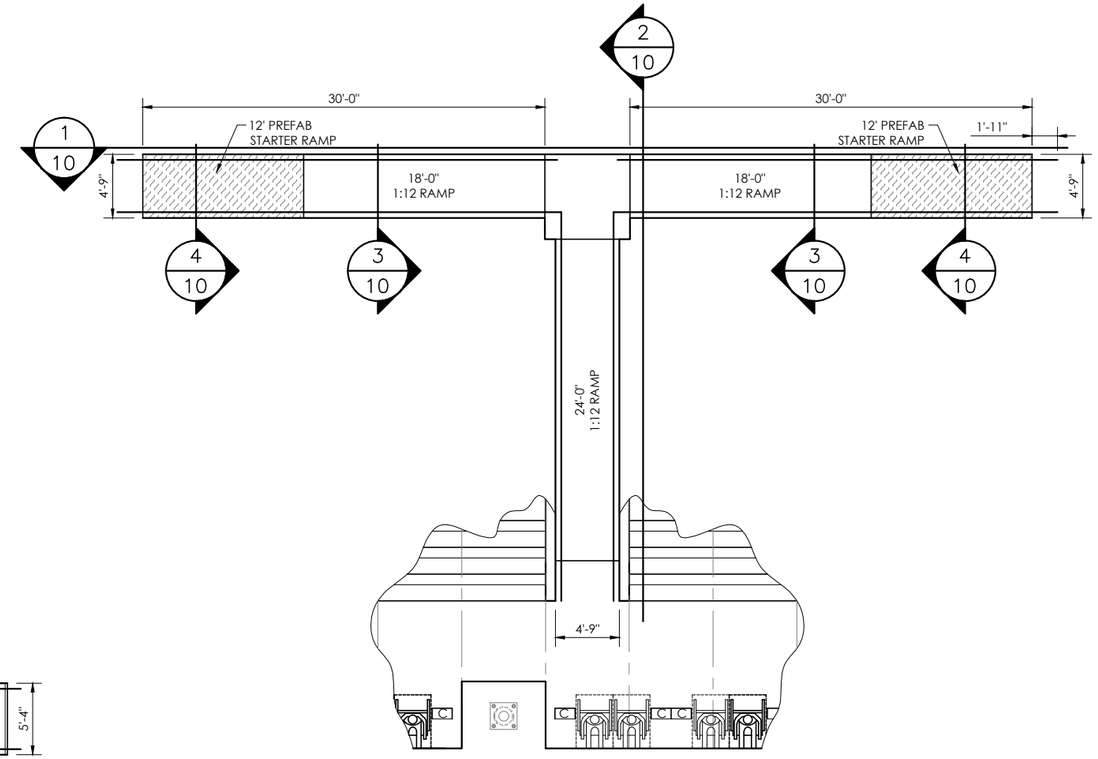

2/6 RAMP PLAN VIEW
SCALE: 3/16"=1'-0"

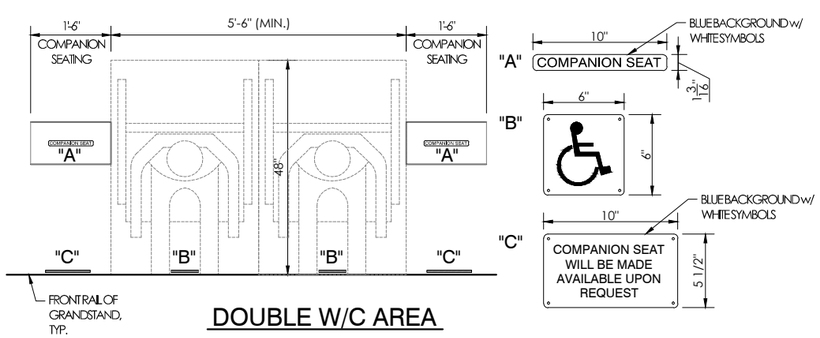

DOUBLE W/C AREA

3/6 SIGN DETAIL
NOT TO SCALE

SIGNAGE TYP. @ WHEELCHAIR AREAS
A = COMPANION: 1 3/16" X 10" PLASTIC
B = ACCESSIBLE: 6" X 6" 0.040 ALUM.
C = COMPANION: 5 1/2" X 10" 0.040 ALUM.

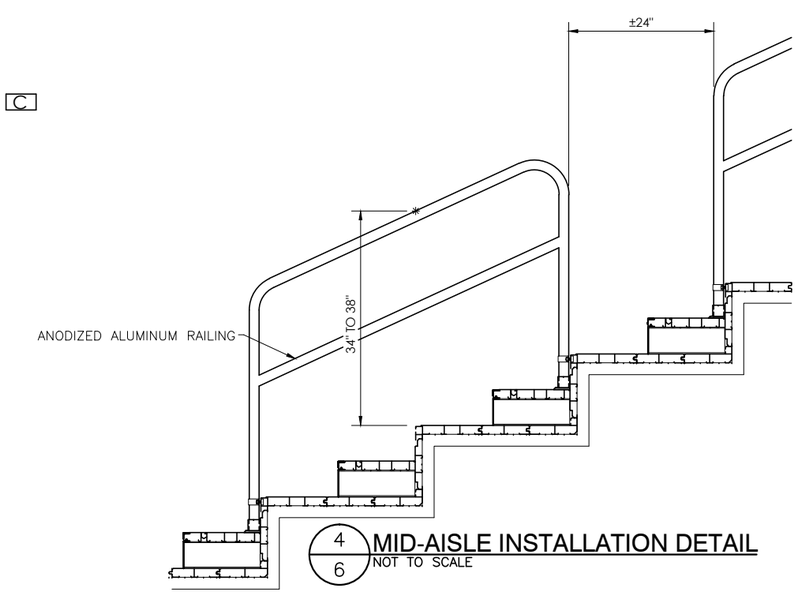

4/6 MID-AISLE INSTALLATION DETAIL
NOT TO SCALE

DETAIL NUMBER
SHEET SHOWN ON
SHEET CUT FROM

THIS DRAWING AND ALL INFORMATION THEREIN IS THE PROPERTY OF THE SOUTHERN BLEACHER COMPANY, AND CONTAINS NOVEL IDEAS AND DESIGNS NOT TO BE COPIED. THIS DRAWING IS LOANED SUBJECT TO RE-TURN UPON DEMAND AND, IS NOT TO BE USED DIRECTLY OR INDIRECTLY IN ANY WAY DETRIMENTAL TO OUR INTERESTS.

NOT FOR CONSTRUCTION

Southern® BLEACHER COMPANY
GRANDSTANDS ■ BLEACHERS ■ TADIUMS
PO Box One, Graham, Texas 76450
801 Fifth Street,
Phone: 940/549-0733 Fax: 940/549-1365
Established 1946

TITLE: SEATING LAYOUT (VISITOR)
24" TREADS / 22 ROWS x 68'-9"

EL MONTE UNION H.S. DISTRICT
EL MONTE HIGH SCHOOL
EL MONTE, CALIFORNIA

REV BY	DATE	DESCRIPTION

DATE	DRAWN	CHECKED
3/20/17	JGS	ECM/DMc

JOB NUMBER **17sd076**

SHEET **6** OF **14**

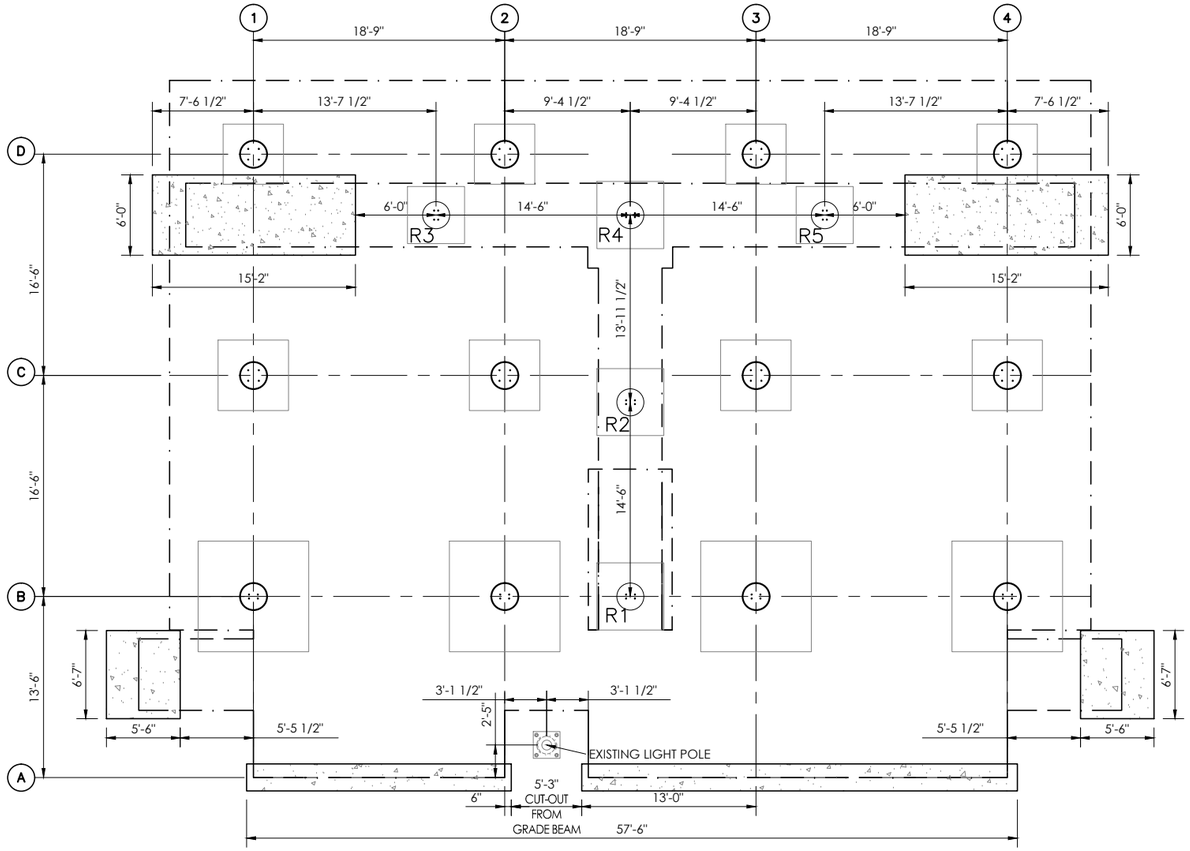

1/7 FOOTING LAYOUT (VISITOR)
SCALE: 3/16"=1'-0"

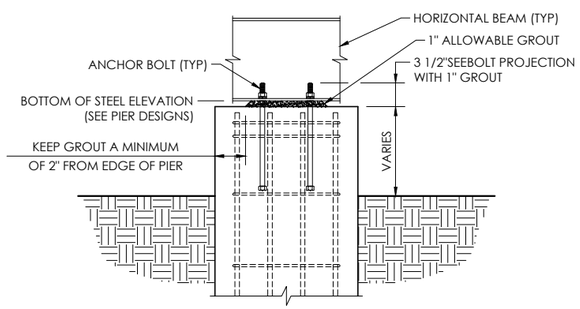

2/7 "B" ROW PIER TOP DETAIL
NOT TO SCALE

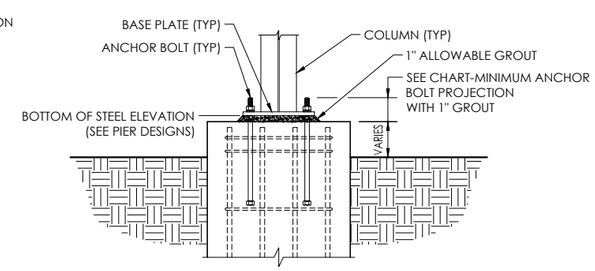

3/7 "C" & "D" ROW PIER TOP DETAIL
NOT TO SCALE

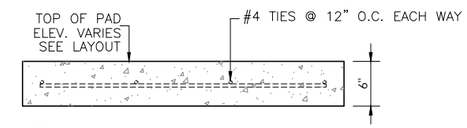

4/7 CONCRETE SLAB DETAIL
NOT TO SCALE

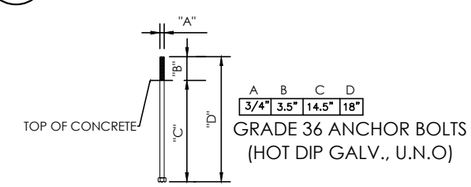

5/7 ANCHOR BOLT DETAIL
NOT TO SCALE

DETAIL NUMBER
SHEET SHOWN ON
SHEET CUT FROM

THIS DRAWING AND ALL INFORMATION THEREIN IS THE PROPERTY OF THE SOUTHERN BLEACHER COMPANY, AND CONTAINS INFORMATION WHICH MAY NOT BE COPIED. THIS DRAWING IS LOANED SUBJECT TO RE-TURN UPON DEMAND AND, IS NOT TO BE USED DIRECTLY OR INDIRECTLY IN ANY WAY DETRIMENTAL TO OUR INTERESTS.

NOT FOR CONSTRUCTION

Southern®
BLEACHER COMPANY
GRANDSTANDS ■ BLEACHERS ■ TADIUMS
PO Box One, Graham, Texas 76450
801 Fifth Street,
Phone: 940/549-0733 Fax: 940/549-1365
Established 1946

TITLE: FOOTING LAYOUT (VISITOR)
24" TREADS / 22 ROWS x 68'-9"

PROJ: EL MONTE UNION H.S. DISTRICT
EL MONTE HIGH SCHOOL
EL MONTE, CALIFORNIA

REV	BY	DATE	DESCRIPTION

DATE 3/20/17 | DRAWN JGS | CHECKED ECM/DMc

JOB NUMBER 17sd076

SHEET 7 OF 14

DESIGN LOADING

TREAD & SEAT AREA 100psf UNIFORM LIVE LOAD.
SEAT (VERTICAL) 120 lbs/lf.
SEAT (HORIZONTAL SWAY) 24lbs/lf PARALLEL AND 10lbs/lf PERPENDICULAR TO SEAT.
TREAD - STAIR AND AISLE TREADS - MINIMUM CONCENTRATED LOAD OF 300LBS ON AN AREA OF 4 SQUARE INCHES
HANDRAIL & GUARDRAIL 50 lbs/lf IN ANY DIRECTION AT THE TOP.
HANDRAIL & GUARDRAIL 200 lbs CONCENTRATED IN ANY DIRECTION.
GUARDS, INFILL COMPONENTS - 50LBS PER SQFT IN HORIZONTAL DIRECTION
SNOW LOADS AS PER STATE ADOPTED CODE
WIND LOADS AS PER STATE ADOPTED CODE
SEISMIC LOADS AS PER STATE ADOPTED CODE

NOTES

1. ALL STRUCTURAL AND MISCELLANEOUS STEEL SHALL CONFORM TO THE FOLLOWING A.I.S.C. STANDARDS
   PLATE UP TO 1/2" THICK = A36
   PLATE U.N.O. = A572 GRADE 50
   ANGLE = A36/A36M GRADE 50
   WIDE FLANGE = A992 Fy=50 ksi
   CHANNEL = A36/A36M GRADE 50
   ROD = A36/A529 GRADE 50
   TUBE = A500 GRADE "B" 46 ksi
2. WELDS ARE ALL AROUND WITH TYPE ER70S-6 WIRE MIG.
3. ALL STEEL TO BE HOT DIPPED GALVANIZED TO A.S.T.M. A-123-89 ae1.
4. STRUCTURAL BOLTS ARE HOT DIPPED GALV. AND ARE EQUAL TO OR GREATER THAN A-307.
5. NO CONNECTIONS UTILIZING HIGH STRENGTH BOLTS ARE CLASSED AS SLIP CRITICAL.
6. ANODIZED ALUMINUM RAIL IS 1 1/4" NOMINAL PIPE SIZE. (1 5/8" O.D.)
7. SOUTHERN BLEACHER COMPANY AS A MANUFACTURER AND INSTALLER OF GRANDSTAND SEATING IS NOT AUTHORIZED TO CERTIFY PLANS AS ADA COMPLIANT. HOWEVER, TO THE BEST OF OUR KNOWLEDGE THESE PLANS MEET OR EXCEED ADA REQUIREMENTS FOR QUANTITY OF ADA SEATING, ACCESS/EGRESS TO ADA SEATING, & DISPERSAL OF ADA SEATING.
8. ALL FIELD CONNECTIONS ARE NON-SLIP CRITICAL U.N.O. ALL CONNECTIONS ARE DESIGNED TO UTILIZE A307 BOLTS, IT IS ACCEPTABLE TO USE A325N BOLTS IN LIEU OF THE A307 BOLTS. THE INSTALLATION OF THESE BOLTS ARE TO BE TIGHTENED A SNUG TIGHT CONDITION AS SPECIFIED BY AISC.

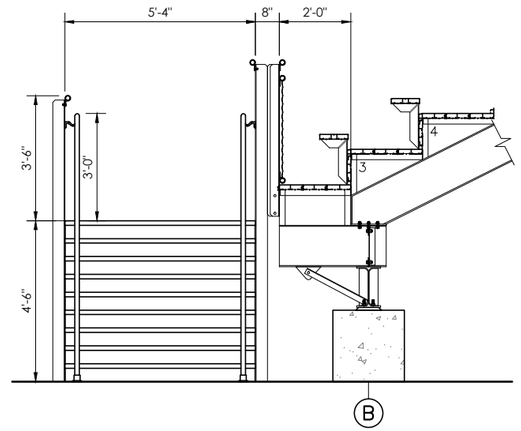

3/8 SECTION VIEW @ STRINGER 12 (VISITOR)
SCALE:1/2"=1'-0" STRINGER 1 MIRRORED

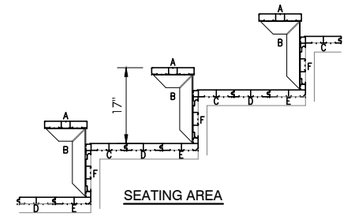

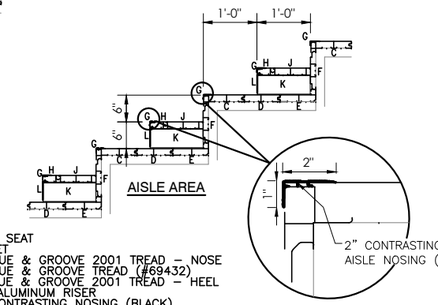

A = 2 X 10 ANODIZED ALUMINUM SEAT
B = MILL ALUMINUM SEAT BRACKET
C = 2 X 8 MILL ALUMINUM TONGUE & GROOVE 2001 TREAD – NOSE
D = 2 X 8 MILL ALUMINUM TONGUE & GROOVE TREAD (#69432)
E = 2 X 8 MILL ALUMINUM TONGUE & GROOVE 2001 TREAD – HEEL
F = 1 X 8 1/2 FLAT ANODIZED ALUMINUM RISER
G = 1 X 2 PAINTED ALUMINUM CONTRASTING NOSING (BLACK)
H = 2 X 4 MILL ALUM. INTERLOCK HALFSTEP – NOSE W/RISER
J = 2 X 8 MILL ALUM. INTERLOCK HALFSTEP – DECK
K = 4 1/2" MILL ALUMINUM HALFSTEP BRACKET
L = 4 1/2" ANODIZED ALUMINUM INTERLOCK STEP RISER

2/8 PLANK ARRANGMENT
NOT TO SCALE

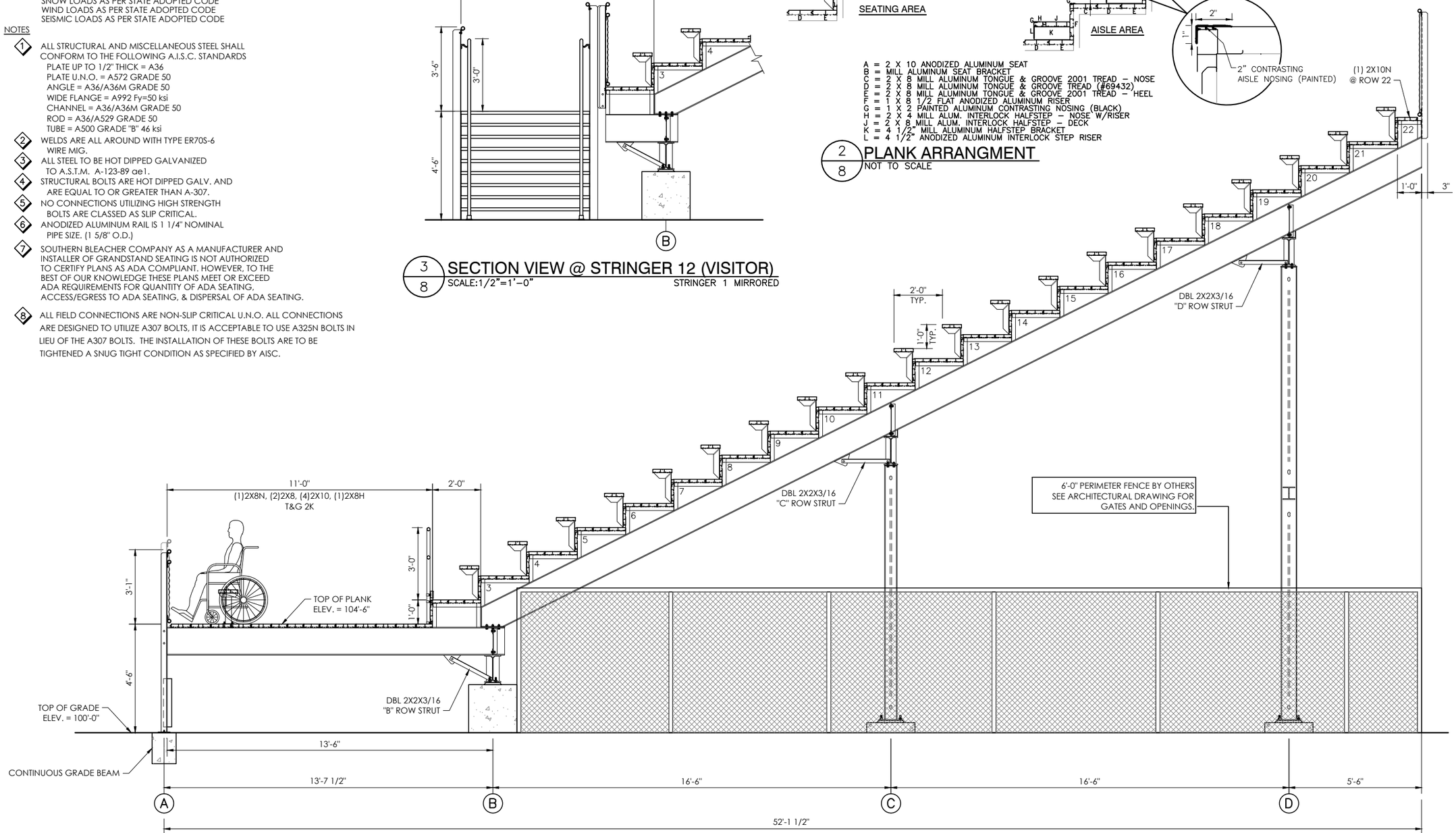

1/8 SECTION VIEW (VISITOR)
SCALE:1/2"=1'-0" 12"X24"

DETAIL NUMBER / SHEET SHOWN ON / SHEET CUT FROM

THIS DRAWING AND ALL INFORMATION THEREIN IS THE PROPERTY OF THE SOUTHERN BLEACHER COMPANY, AND IS CONFIDENTIAL AND MUST NOT BE REPRODUCED, COPIED, THIS DRAWING IS LOANED SUBJECT TO RE-TURN UPON DEMAND AND, IS NOT TO BE USED DIRECTLY OR INDIRECTLY IN ANY WAY DETRIMENTAL TO OUR INTERESTS.

NOT FOR CONSTRUCTION

Southern BLEACHER COMPANY
GRANDSTANDS ■ BLEACHERS ■ TADIUMS
PO Box One, Graham, Texas 76450
801 Fifth Street.
Phone: 940/549-0733 Fax: 940/549-1365
Established 1946

REV BY	DATE	DESCRIPTION

TITLE: SECTION VIEW (VISITOR) 12" RISE X 24" TREADS / 22 ROWS

TRIL: EL MONTE UNION H.S. DISTRICT
EL MONTE HIGH SCHOOL
EL MONTE, CALIFORNIA

DATE 3/20/17 | DRAWN JGS | CHECKED ECM/DMc

JOB NUMBER 17sd076

SHEET 8 OF 14

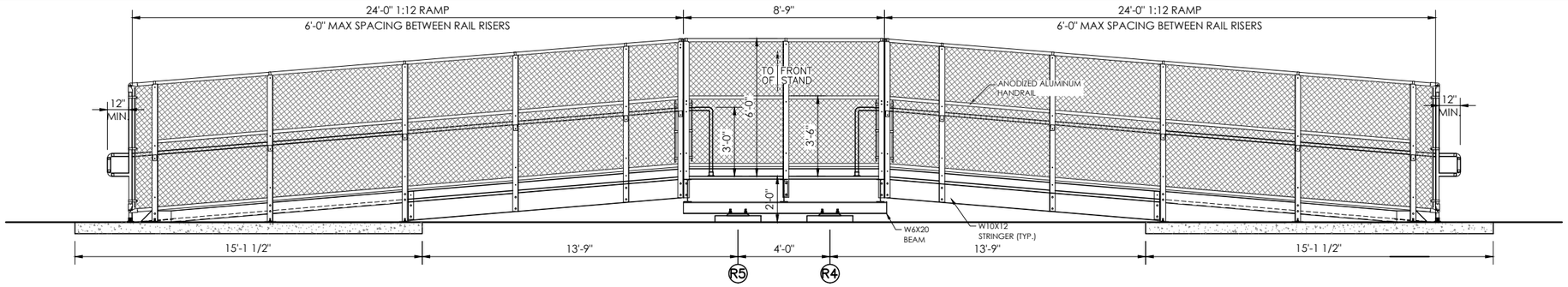

1/9 RAMP DETAIL (HOME)
NOT TO SCALE

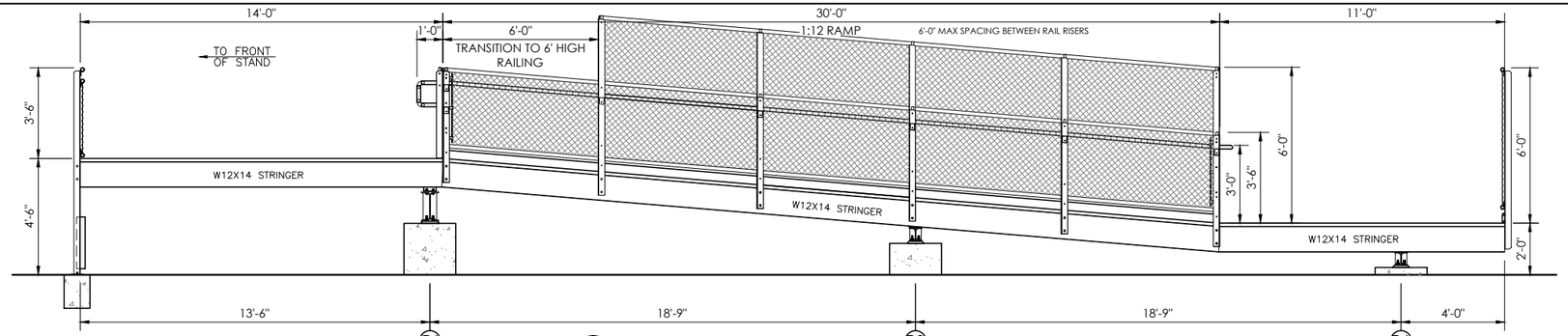

2/9 RAMP DETAIL (HOME)
NOT TO SCALE

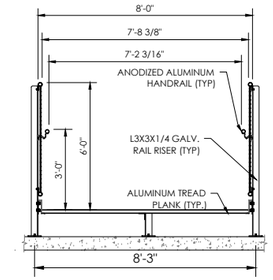

4/9 RAMP SECTION DETAIL
NOT TO SCALE

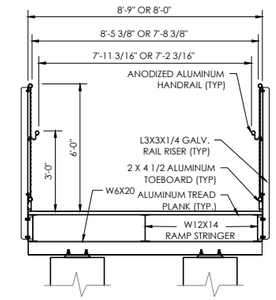

3/9 RAMP SECTION DETAIL
NOT TO SCALE

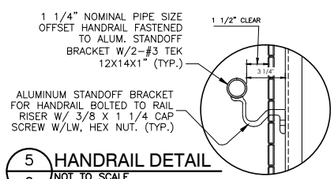

5/9 HANDRAIL DETAIL
NOT TO SCALE

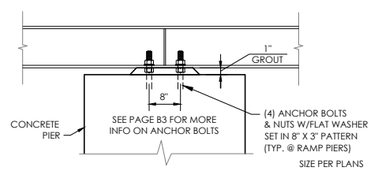

6/9 RAMP BEAM DETAIL
NOT TO SCALE

ALL CONCRETE & GRADE WORK BY OTHERS

ALL DIMENSIONS & ELEVATIONS TO BE FIELD VERIFIED BEFORE FABRICATION

GRADE SHOULD NOT COVER TOP OF ANY PIER OR GRADE BEAM AND SHOULD BE WORKED TO MATCH EXIT STEP & RAMP PAD ELEVATIONS

DETAIL NUMBER
SHEET SHOWN ON
SHEET CUT FROM

NOT FOR CONSTRUCTION

THIS DRAWING AND ALL INFORMATION THEREIN IS THE PROPERTY OF THE SOUTHERN BLEACHER COMPANY, AND CONSTITUTES ORIGINAL WORK. IT MAY NOT BE COPIED. THIS DRAWING IS LOANED SUBJECT TO RE-TURN UPON DEMAND AND, IS NOT TO BE USED DIRECTLY OR INDIRECTLY IN ANY WAY DETRIMENTAL TO OUR INTERESTS.

Southern®
BLEACHER COMPANY
GRANDSTANDS ■ BLEACHERS ■ TADIUMS
PO Box One, Graham, Texas 76450
801 Fifth Street,
Phone: 940/549-0733 Fax: 940/549-1365
Established 1946

TITLE: EXIT DETAILS

TITLE: EL MONTE UNION H.S. DISTRICT
EL MONTE HIGH SCHOOL
EL MONTE, CALIFORNIA

REV'S	BY	DATE	DESCRIPTION

DATE	DRAWN	CHECKED
3/20/17	JGS	ECM/DMc

JOB NUMBER 17sd076

SHEET 9 OF 14

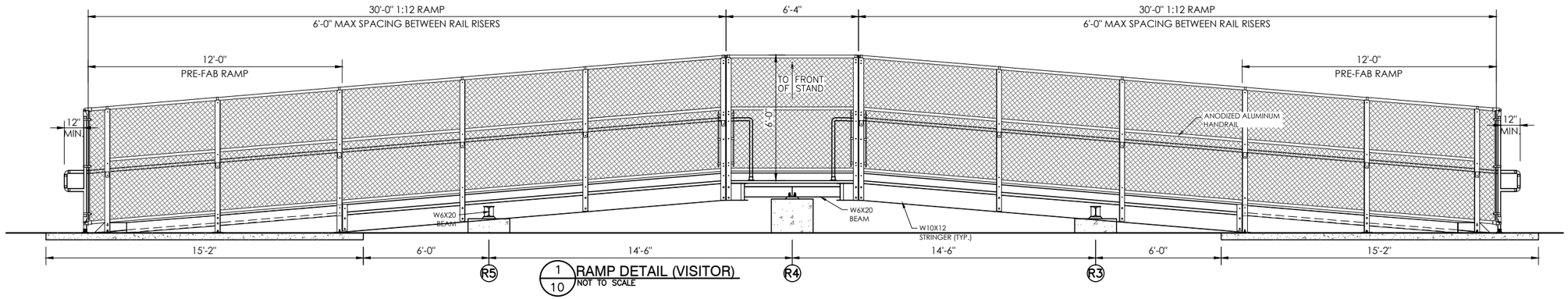

1/10 RAMP DETAIL (VISITOR)
NOT TO SCALE

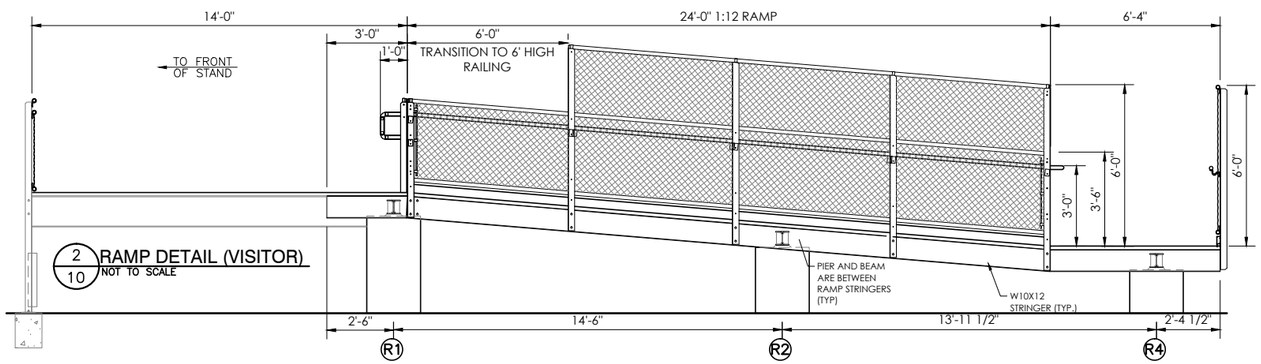

2/10 RAMP DETAIL (VISITOR)
NOT TO SCALE

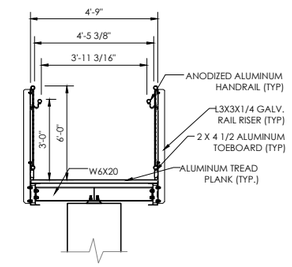

3/10 RAMP SECTION DETAIL
NOT TO SCALE

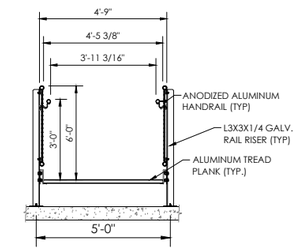

4/10 RAMP SECTION DETAIL
NOT TO SCALE

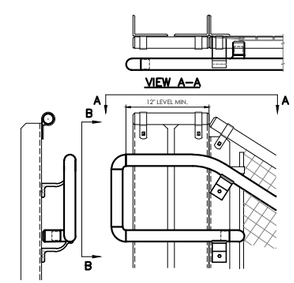

4/10 HANDRAIL TERMINATION DETAIL
NOT TO SCALE

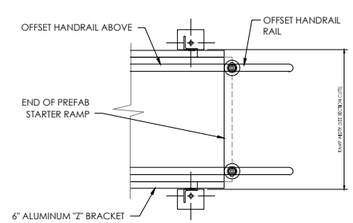

4/10 END OF RAMP DETAIL
NOT TO SCALE

ALL CONCRETE & GRADE WORK BY OTHERS

ALL DIMENSIONS & ELEVATIONS TO BE FIELD VERIFIED BEFORE FABRICATION

GRADE SHOULD NOT COVER TOP OF ANY PIER OR GRADE BEAM AND SHOULD BE WORKED TO MATCH EXIT STEP & RAMP PAD ELEVATIONS

DETAIL NUMBER / SHEET SHOWN ON / SHEET CUT FROM

THIS DRAWING AND ALL INFORMATION THEREIN IS THE PROPERTY OF THE SOUTHERN BLEACHER COMPANY, AND IS CONFIDENTIAL AND MUST NOT BE REPRODUCED, COPIED, THIS DRAWING IS LOANED SUBJECT TO RE-TURN UPON DEMAND AND, IS NOT TO BE USED DIRECTLY OR INDIRECTLY IN ANY WAY DETRIMENTAL TO OUR INTERESTS.

NOT FOR CONSTRUCTION

Southern® BLEACHER COMPANY
GRANDSTANDS ■ BLEACHERS ■ TADIUMS
PO Box One, Graham, Texas 76450
801 Fifth Street.
Phone: 940/549-0733 Fax: 940/549-1365
Established 1946

NAME: EXIT DETAILS

TITLE: EL MONTE UNION H.S. DISTRICT
EL MONTE HIGH SCHOOL
EL MONTE, CALIFORNIA

REV BY	DATE	DESCRIPTION

DATE	DRAWN	CHECKED
3/20/17	JGS	ECM/DMc

JOB NUMBER 17sd076

SHEET 10 OF 14

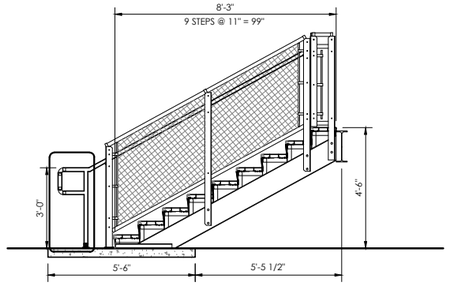

1/11 EXIT STAIR DETAIL (VISITOR SIDE)
NOT TO SCALE

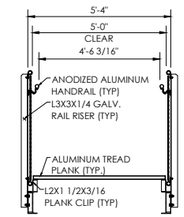

2/11 CONNECTION DETAIL
NOT TO SCALE

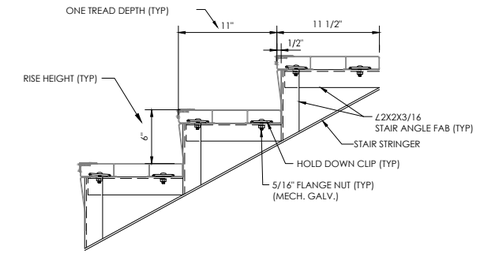

3/11 EXIT STEP (TREAD) DETAIL
NOT TO SCALE

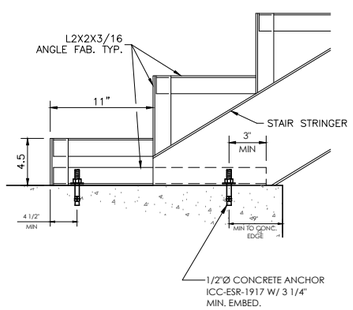

4/11 CONNECTION DETAIL
NOT TO SCALE

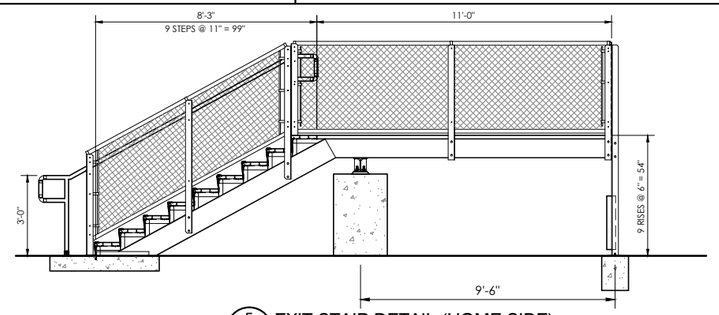

5/11 EXIT STAIR DETAIL (HOME SIDE)
NOT TO SCALE

ALL CONCRETE & GRADE WORK BY OTHERS

ALL DIMENSIONS & ELEVATIONS TO BE FIELD VERIFIED BEFORE FABRICATION

GRADE SHOULD NOT COVER TOP OF ANY PIER OR GRADE BEAM AND SHOULD BE WORKED TO MATCH EXIT STEP & RAMP PAD ELEVATIONS

DETAIL NUMBER
SHEET SHOWN ON
SHEET CUT FROM

THIS DRAWING AND ALL INFORMATION THEREIN IS THE PROPERTY OF THE SOUTHERN BLEACHER COMPANY, AND IS CONFIDENTIAL AND MUST NOT BE USED OR COPIED. THIS DRAWING IS LOANED SUBJECT TO RETURN UPON DEMAND AND, IS NOT TO BE USED DIRECTLY OR INDIRECTLY IN ANY WAY DETRIMENTAL TO OUR INTERESTS.

NOT FOR CONSTRUCTION

Southern®
BLEACHER COMPANY
GRANDSTANDS ■ BLEACHERS ■ TADIUMS
PO Box One, Graham, Texas 76450
801 Fifth Street.
Phone: 940/5494/1733 Fax: 940/549-1365
Established 1946

REV BY	DATE	DESCRIPTION

TITLE: EXIT DETAILS

SITE: EL MONTE UNION H.S. DISTRICT
EL MONTE HIGH SCHOOL
EL MONTE, CALIFORNIA

DATE	DRAWN	CHECKED
3/20/17	JGS	ECM/DMc

JOB NUMBER 17sd076

SHEET 11 OF 14

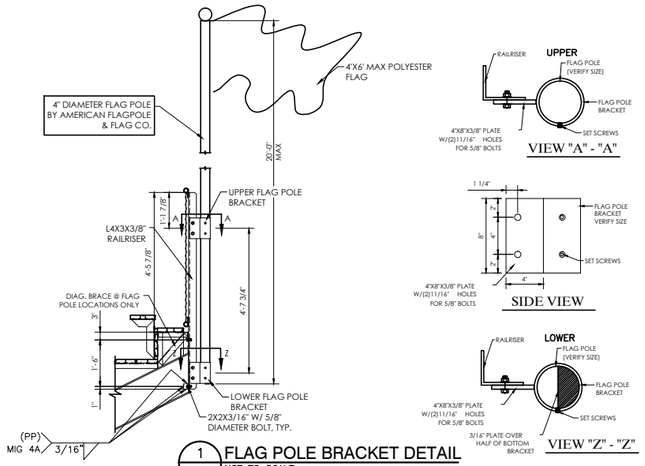

1/12 FLAG POLE BRACKET DETAIL
NOT TO SCALE

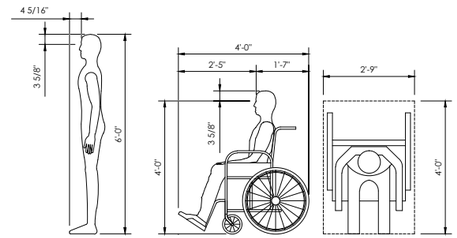

2/12 SIGHT LINE PARAMETERS
NOT TO SCALE

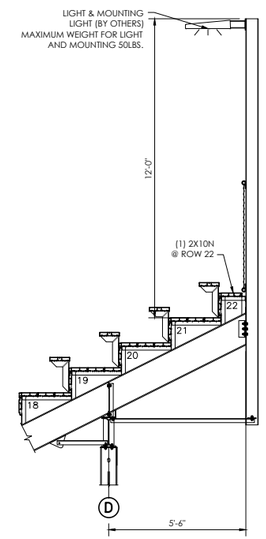

3/12 SECTION VIEW @ LIGHT POLE
NOT TO SCALE

HOME SIDE
STRINGER # 2, COLUMN LINE D1
STRINGER # 23, COLUMN LINE D6

VISITOR SIDE
STRINGER #2, COLUMN LINE D1
STRINGER #11, COLUMN LINE D4

DETAIL NUMBER
SHEET SHOWN ON
SHEET CUT FROM

THIS DRAWING AND ALL INFORMATION THEREIN IS THE PROPERTY OF THE SOUTHERN BLEACHER COMPANY, AND CONTAINS NOVEL DESIGNS, WHICH MAY NOT BE COPIED. THIS DRAWING IS LOANED SUBJECT TO RE-TURN UPON DEMAND AND, IS NOT TO BE USED DIRECTLY OR INDIRECTLY IN ANY WAY DETRIMENTAL TO OUR INTERESTS.

NOT FOR CONSTRUCTION

Southern®
BLEACHER COMPANY
GRANDSTANDS ■ BLEACHERS ■ TADIUMS
PO Box One, Graham, Texas 76450
801 Fifth Street.
Phone: 940/549-0733 Fax: 940/549-1365
Established 1946

TITLE: DETAILS

SHEET: EL MONTE UNION H.S. DISTRICT
EL MONTE HIGH SCHOOL
EL MONTE, CALIFORNIA

REV	BY	DATE	DESCRIPTION

DATE	DRAWN	CHECKED
3/20/17	JGS	ECM/DMc

JOB NUMBER 17sd076

SHEET 12 OF 14

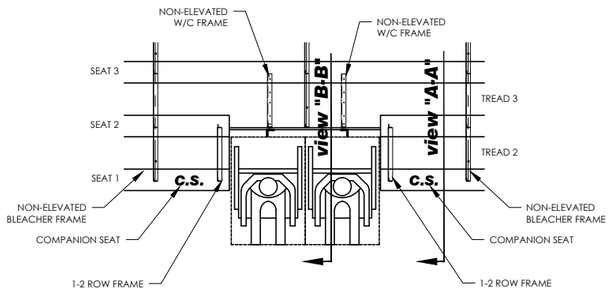

4/13 PLAN VIEW @ DOUBLE W/C AREA
NOT TO SCALE

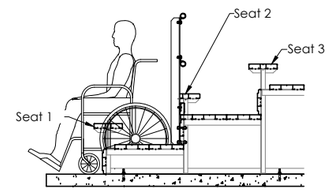

view "A-A"

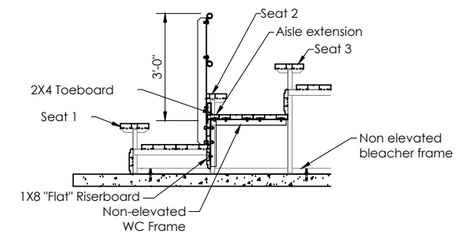

view "B-B"

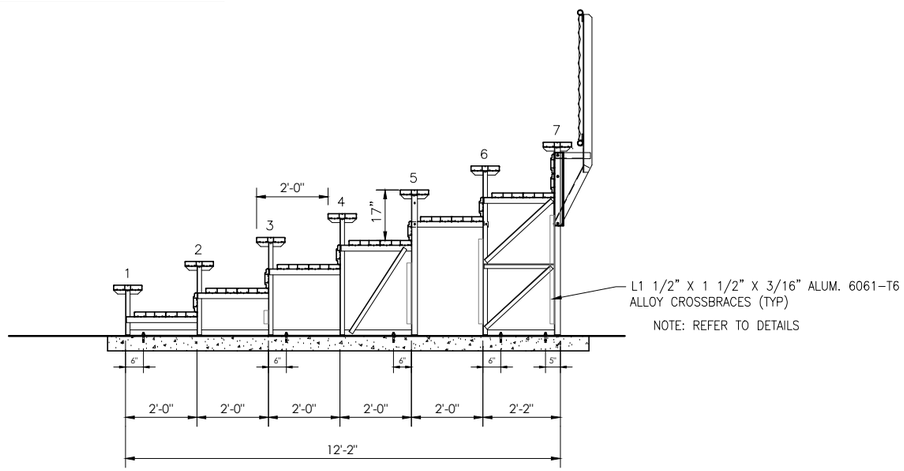

1/13 SECTION VIEW: 7 ROW NON-ELEVATED
SCALE:NONE

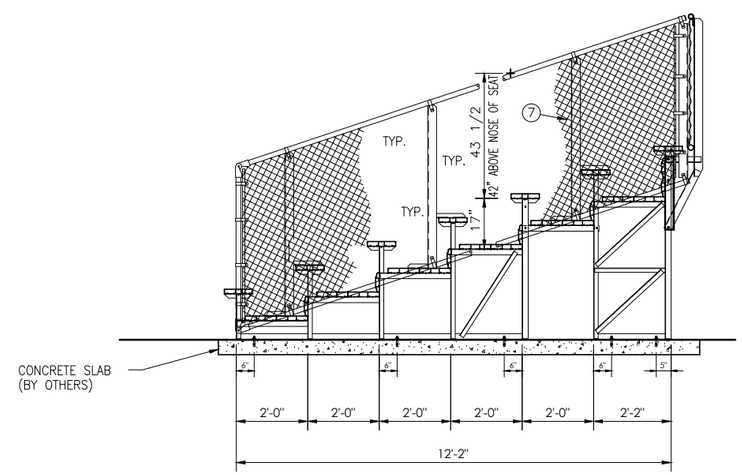

2/13 SIDE VIEW: 7 ROW NON-ELEVATED
SCALE:NONE

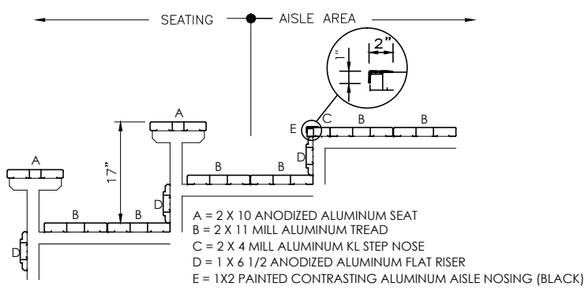

3/13 PLANK ARRANGEMENT
1" = 1'-0" 8" X 24"

DESIGN LOADING

TREAD & SEAT AREA (GROSS AREA) 100psf.
SEAT (PERPENDICULAR SWAY) 10 lbs/lf.
SEAT (PARALLEL SWAY) 24lbs/lf.
HANDRAILS (PERPENDICULAR) 50 lbs/lf.
HANDRAILS (VERTICAL) 100 lbs/lf.
SEAT & TREAD 120 lbs/lf.

NOTES

1. STRUCTURAL SHAPES MEET ONE OF THE FOLLOWING ASTM SPECIFICATIONS: A572 GRADE 50, A529-50, OR A500 GRADE B.
2. WELDS ARE ALL AROUND WITH TYPE ER70S-6 WIRE MIG.
3. ALL STEEL TO BE HOT DIPPED GALVANIZED TO A.S.T.M. A-123-89 ae1.
4. STRUCTURAL BOLTS ARE HOT DIPPED GALV. AND ARE EQUAL TO OR GREATER THAN A-307.
5. ANODIZED ALUMINUM RAIL IS 1 1/4" NOMINAL PIPE SIZE.
6. ANODIZED ALUMINUM SCH. 40 PIPE IS 1 1/4" NOMINAL PIPE SIZE.

DETAIL NUMBER / SHEET SHOWN ON / SHEET CUT FROM

THIS DRAWING AND ALL INFORMATION THEREIN IS THE PROPERTY OF THE SOUTHERN BLEACHER COMPANY, AND CONTAINS, AND MUST BE KEPT, CONFIDENTIAL. COPIED, THIS DRAWING IS LOANED SUBJECT TO RE-TURN UPON DEMAND AND, IS NOT TO BE USED DIRECTLY OR INDIRECTLY IN ANY WAY DETRIMENTAL TO OUR INTERESTS.

NOT FOR CONSTRUCTION

Southern® BLEACHER COMPANY
GRANDSTANDS ■ BLEACHERS ■ TADIUMS
PO Box One, Graham, Texas 76450
801 Fifth Street.
Phone: 940/549-0733 Fax: 940/549-1365
Established 1946

TITLE: SIDE VIEW (ANGLE FRAME BLEACHERS) 8" RISE X 24" TREAD / 7 ROWS

PROJ: EL MONTE UNION H.S. DISTRICT / EL MONTE HIGH SCHOOL / EL MONTE, CALIFORNIA

REV BY	DATE	DESCRIPTION

DATE 3/20/17 DRAWN JGS CHECKED ECM/DMG

JOB NUMBER 17sd076

SHEET 13 OF 14

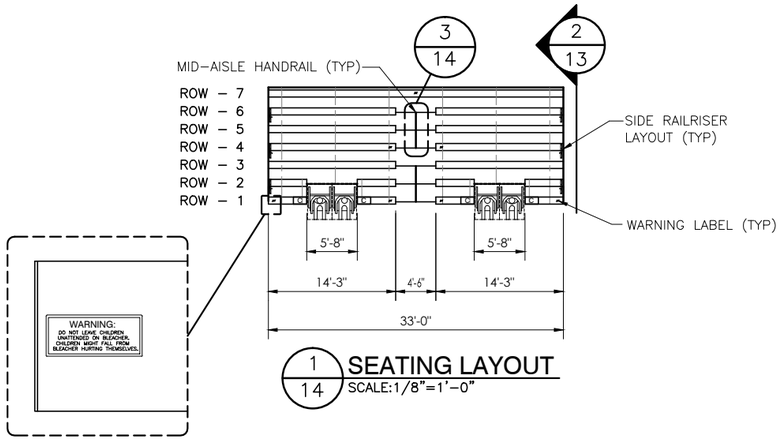

1/14 SEATING LAYOUT
SCALE:1/8"=1'-0"

106 TOTAL NET 18" SEATS
4 TOTAL 18" COMPANION SEATS
4 TOTAL NET 33" WHEELCHAIR SPACES
114 TOTAL SEATING CAPACITY

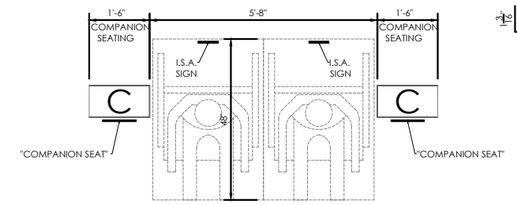

2/14 WHEELCAIR AREA DETAIL
NOT TO SCALE

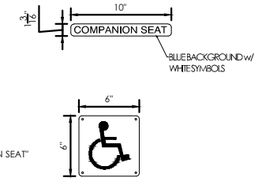

SIGNAGE TYP. @ WHEELCHAIR AREAS (COMPANION: 1 3/4" X 10" PLASTIC) (ACCESSIBLE: 6" X 6" 0.040 ALUM.)

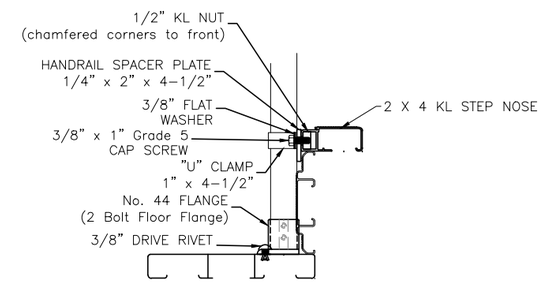

4/14 CONN. DETAIL
NOT TO SCALE

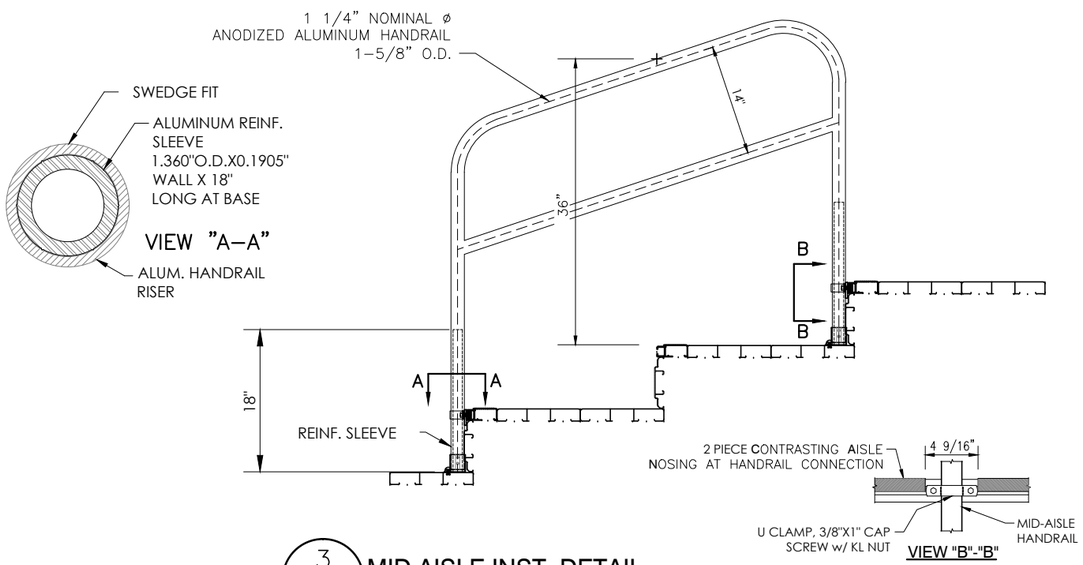

3/14 MID AISLE INST. DETAIL
N.T.S.

DETAIL NUMBER
SHEET SHOWN ON
SHEET CUT FROM

THIS DRAWING AND ALL INFORMATION THEREIN IS THE PROPERTY OF THE SOUTHERN BLEACHER COMPANY, AND CONTAINS NOVEL DESIGNS, IDEAS, AND MAY NOT BE COPIED. THIS DRAWING IS LOANED SUBJECT TO RETURN UPON DEMAND AND, IS NOT TO BE USED DIRECTLY OR INDIRECTLY IN ANY WAY DETRIMENTAL TO OUR INTERESTS.

NOT FOR CONSTRUCTION

Southern®
BLEACHER COMPANY
GRANDSTANDS ■ BLEACHERS ■ TADIUMS
PO Box One, Graham, Texas 76450
801 Fifth Street.
Phone: 940/549-0733 Fax: 940/549-1365
Established 1946

TITLE: SEATING LAYOUT (ANGLE FRAME BLEACHER) 24" TREAD / 7 ROWS X 33'-0"

SITE: *EL MONTE UNION H.S. DISTRICT*
EL MONTE HIGH SCHOOL
EL MONTE, CALIFORNIA

REV	BY	DATE	DESCRIPTION

DATE	DRAWN	CHECKED
3/20/17	JGS	ECM/DMc

JOB NUMBER **17sd076**

SHEET **14** OF **14**